AKAI

SERVICE MANUAL

Model:

LCT3201AD

1. Safety Instructions ·····1~2
2. Production Specification ·····4~15
3. Circuit Diagram ····· 16~40
4. Main IC Information ····· 41
5. Panel Information····· 42~74
6. Explored View ····· 75
7. Spare Part List·····76~78
8. V-Chip Password····· 79
9. Software Upgrade ····· 80~86

This manual is the latest at the time of printing, and does not include the modification which may be made after the printing, by the constant improvement of product.

I. Safety Instructions

CAUTION

RISK OF ELECTRIC SHOCK DO NOT OPEN

CAUTION: TO REDUCE THE RISK OF ELECTRIC SHOCK, DO NOT REMOVE COVER (OR BACK). NO USER-SERVICEABLE PARTS INSIDE. REFER SERVICING TO QUALIFIED SERVICE PERSONNEL ONLY.

The lightning flash with arrowhead symbol, within an equilateral triangle, is intended to alert the user to the presence of uninsulated " dangerous voltage" within the product' s enclosure that may be of sufficient magnitude to constitute a risk of electric shock to persons.

The exclamation point within an equilateral triangle is intended to alert the user to the presence of important operating and maintenance (servicing) instructions in the literature accompanying the appliance.

PRECAUTIONS DURING SERVICING

1. In addition to safety, other parts and assemblies are specified for conformance with such regulations as those applying to spurious radiation. These must also be replaced only with specified replacements. Examples: RF converters, tuner units, antenna selection switches, RF cables, noise-blocking capacitors, noise-blocking filters, etc.
2. Use specified internal Wiring. Note especially:
   1) Wires covered with PVC tubing
   2) Double insulated wires
   3) High voltage leads
3. Use specified insulating materials for hazardous live parts. Note especially:
   1) Insulating Tape
   2) PVC tubing
   3) Spacers (insulating barriers)
   4) Insulating sheets for transistors
   5) Plastic screws for fixing micro switches
4. When replacing AC primary side components (transformers, power cords, noise blocking capacitors, etc.), wrap ends of wires securely about the terminals before soldering.

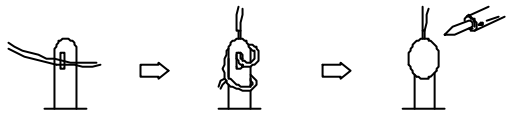

5. Make sure that wires do not contact heat generating parts (heat sinks, oxide metal film resistors, fusible resistors, etc.)
6. Check if replaced wires do not contact sharply edged or pointed parts.
7. Make sure that foreign objects (screws, solder droplets, etc.) do not remain inside the set.

MAKE YOUR CONTRIBUTION TO PROTECT THE ENVIRONMENT

Used batteries with the ISO symbol for recycling as well as small accumulators (rechargeable batteries), mini-batteries (cells) and starter batteries should not be thrown into the garbage can.

Please leave them at an appropriate depot.

WARNING:

Before servicing this TV receiver, read the X-RAY RADIATION PRECAUTION, SAFETY INSTRUCTION and PRODUCT SAFETY NOTICE.

X-RAY RADIATION PRECAUTION

1. Excessively high can produce potentially hazardous X-RAY RADIATION. To avoid such hazards, the high voltage must not exceed the specified limit. The normal value of the high voltage of this TV receiver is 27 KV at zero bean current (minimum brightness). The high voltage must not exceed 30 KV under any circumstances. Each time when a receiver requires servicing, the high voltage should be checked. The reading of the high voltage is recommended to be recorded as a part of the service record, It is important to use an accurate and reliable high voltage meter.
2. The only source of X-RAY RADIATION in this TV receiver is the picture tube. For continued X-RAY RADIATION protection, the replacement tube must be exactly the same type as specified in the parts list.
3. Some parts in this TV receiver have special safety related characteristics for X-RADIATION protection. For continued safety, the parts replacement should be under taken only after referring the PRODUCT SAFETY NOTICE.

SAFETY INSTRUCTION

The service should not be attempted by anyone unfamiliar with the necessary instructions on this TV receiver. The following are the necessary instructions to be observed before servicing.

1. An isolation transformer should be connected in the power line between the receiver and the AC line when a service is performed on the primary of the converter transformer of the set.
2. Comply with all caution and safety related provided on the back of the cabinet, inside the cabinet, on the chassis or picture tube.
3. To avoid a shock hazard, always discharge the picture tube's anode to the chassis ground before removing the anode cap.

4. Completely discharge the high potential voltage of the picture tube before handling. The picture tube is a vacuum and if broken, the glass will explode.
5. When replacing a MAIN PCB in the cabinet, always be certain that all protective are installed properly such as control knobs, adjustment covers or shields, barriers, isolation resistor networks etc.
6. When servicing is required, observe the original lead dressing. Extra precaution should be given to assure correct lead dressing in the high voltage area.
7. Keep wires away from high voltage or high tempera ture components.
8. Before returning the set to the customer, always perform an AC leakage current check on the exposed metallic parts of the cabinet, such as antennas, terminals, screwheads, metal overlay, control shafts, etc., to be sure the set is safe to operate without danger of electrical shock. Plug the AC line cord directly to the AC outlet (do not use a line isolation transformer during this check). Use an AC voltmeter having 5K ohms volt sensitivity or more in the following manner.
   Connect a 1.5K ohm 10 watt resistor paralleled by a 0.15µF AC type capacitor, between a good earth ground (water pipe, conductor etc.,) and the exposed metallic parts, one at a time.
   Measure the AC voltage across the combination of the 1.5K ohm resistor and 0.15 uF capacitor. Reverse the AC plug at the AC outlet and repeat the AC voltage measurements for each exposed metallic part.
   The measured voltage must not exceed 0.3V RMS. This corresponds to 0.5mA AC. Any value exceeding this limit constitutes a potential shock hazard and must be corrected immediately.
   The resistance measurement should be done between accessible exposed metal parts and power cord plug prongs with the power switch "ON". The resistance should be more than 6M ohms.

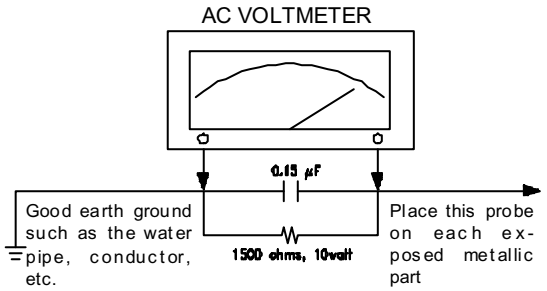

AC Leakage Current Check

PRODUCT SAFETY NOTICE

Many electrical and mechanical parts in this TV receiver have special safety-related characteristics. These characteristics are offer passed unnoticed by visual spection and the protection afforded by them cannot necessarily be obtained by using replacement components rates for a higher voltage, wattage, etc. The replacement parts which have these special safety characteristics are identified by ⚠ marks on the schematic diagram and on the parts list. Before replacing any of these components, read the parts list in this manual carefully. The use of substitute replacement parts which do not have the same safety characteristics as specified in the parts list may create shock, fire, X-RAY RADIATION or other hazards.

Reference No : LCT3201AD

Product Specification

1.1 VIDEO SECTION	CMO V320B1-L01 MK8202 USA
Display size	32"/16:9
Display Resolution	1366 X 768
Pixel Pitch	510.75μm (H) x 510.75μm (V)
Peak Brightness	550(nits)
Contract Ratio	1000:1, Typical (1/100 White Window, Dark Room)
View Angle	Hor. And Vert. ≥170 degree
Color Deeps	16.7M Color (R / G/ B each 256 Scales)
PC Resolution Supporting	VGA, SVGA, XGA,WXGA
HDTV Compatible	480p /720p /1080i
Progressive Scanning	Yes
Film Mode Pull Down	Yes
"GAMMA" Correction	Yes
Color Temperature Control	Yes
Comb Filter	Yes
Second De-interlace for Sub picture	No
Wide Mode	Full, 4:3 and Panoramic.
TV System	NTSC M
Dual Tuner System	No
AV Input Color System	PAL /NTSC
PIP	No
1.2 AUDIO SECTION	
Audio Output Power	7W×2(8 ohm)
Sound Effect	Spatial Effect and Surround
Tone Control	Yes
1.3 Input Terminals	D-Sub 15 Pin Type (Analog-RGB Input) ×1 HDMI (Ver 1.1) Connector x 1 D-Sub 9 Pin (RS-232) RF (F-type Input) ×2 (ATV, DTV) Component Video-YPbPr × 1 RCA Terminals S-Video Input (Mini Din 4Pin) ×1 Video Input RCA Terminals Stereo Audio Input x 4
1.4 Output Terminals	Audio Output (RCA ; L&R Type) ×1
1.5 Others	
Closed Caption / V-Chip	Yes
Teletext	No
OSD Language	English, Français, Español

Reference No : LCT3201AD

Stereo Decode	MTS with SAP
Power Rating	AC 120V, 60Hz
Power Consumption	≤200W

1.6 Support the Signal Mode
This machine can support the different from VGA signal mode in 6 kinds

Resolution	Horizontal Frequency (kHz)	Vertical Frequency (kHz)
640 x 480	31.50	60.00
	37.86	72.81
800 x 600	35.16	56.25
	37.90	60.32
	48.08	72.19
1024 x 768	48.40	60.00

1.7 HDTV Mode (YPbPr)

Resolution	Horizontal Frequency (KHz)	Vertical Frequency (Hz)
480i	15.734	59.94
480p(720x480)	31.468	59.94
720p(1280x720)	45.00	60.00
1080i(1920x1080)	33.75	60.00

Reference No : LCT3201AD

Technical Data

1. Power supply	TV	AC 120V, 60Hz	
	Remote control	Battery 3V (UM-3/R6P/AAA×2)	
2. TV system	TV System	NTSC M	ATSC
	Stereo Decode	MTS	MPEG-2
	Closed Caption/V-Chip	Yes	Yes
	Channel	181 CH	2-69 CH
3. Intermediate frequencies	Picture	45.75MHz	
4. Scanning	Horizontal (Hz)	15625/15750	
	Vertical (Hz)	50/60	
5. AC plug		UL Plug	
6. Panel		**V**320B1-L01	
7. Speaker	Internal	8 ohm 10W ×2	
8. Operating temperature	Fulfill all specifications	15°C ~ 30°C	
	Accept picture/sound reproduction	5°C ~ 33°C	
9. Operating relative humidity	Fulfill all specifications	45% ~ 75%	
	Accept picture/sound reproduction	20% ~ 80%	
10. Electrical & optical specification		See the attachment 1.	
11. Circuit diagram drawing No.			
12. Cabinet			
13. Cabinet color			
14. Packing		1 set per	
15. Container stuffing method		RD/05/P/LC26HAB/CSI/02 REV: 01	
16. Dimension (mm) (No packing)	LCD-TV	799(W)× 569.7(H)×107(D)mm (w/o Stand)	
		799(W) × 635.8(H) × 267.5(D)mm (with Stand)	
	Remote control unit	183(L) × 53(W) ×28(T)mm	
17. Net weight	LCD-TV	18.4Kg (with Stand) approx.	
	Remote control	93g	
18. Cell Defect		Subject to Panel supplier specification	

Remote Control

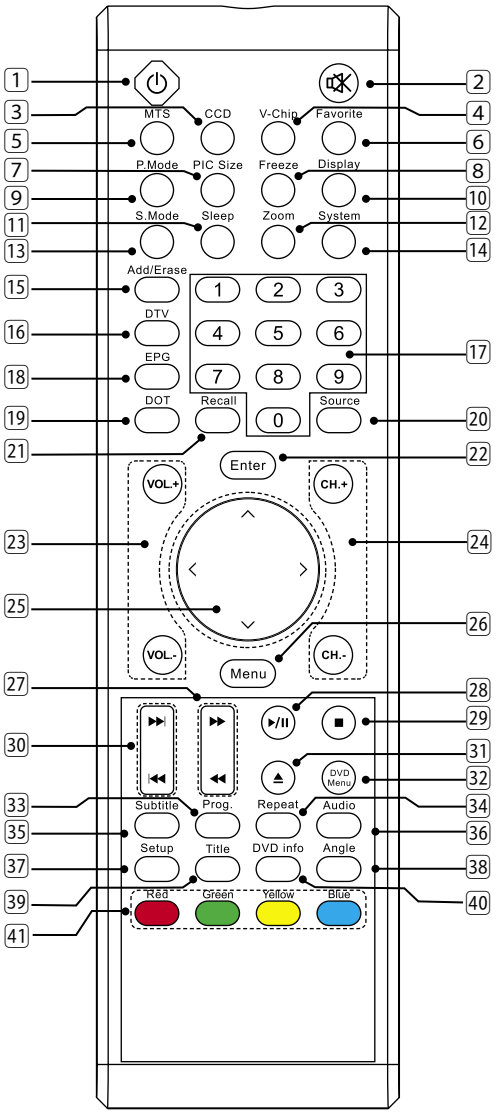

1. **Power** (⏻): Press to turn on and off.
2. **Mute** (🔇): Press to mute the sound. Press again or press VOL+/- to restore the sound.
3. **CCD**: Press to select the Closed Caption mode.
4. **V-Chip**: Press to select the child protect mode.
5. **MTS**: Press repeatedly to cycle through the Multi-channel TV sound (MTS) options: Mono, Stereo and SAP (Second Audio Program).
6. **Favorite**: Press repeatedly to cycle through the favorite channel list.
7. **PIC.Size**: Press to change the screen size, such as Full, 4:3, Panoramic. (Note: In VGA mode, it can select picture size is Full. While in DTV mode, it can select picture size is: Full and 4:3.)
8. **Freeze**: Press to freeze the picture, press again to restore the picture. (This button is not available for VGA mode.)
9. **P.Mode**: Press repeatedly to cycle through the picture mode: Hi-Bright, User, Cinema, Normal and Vivid.
10. **Display**: Press to display the channel information and it disappear after 3 seconds.
11. **Sleep**: Press repeatedly until it displays the time in minutes (15 Min, 30 Min, 60Min, 90 Min ,120 Min and, OFF) that you want the TV to remain on before shutting off. To cancel sleep time, press **Sleep** button repeatedly until sleep OFF appears.
12. **Zoom**: Press to zoom the image. (This button is not available for VGA mode.)
13. **S.Mode**: Press repeatedly to cycle through the sound mode: Normal, News, Cinema, Concert and User.
14. **System**: Press repeatedly to cycle through the system options: AUTO, NTSC3.58 and PAL. (This button is activate for AV, S-Video input source.)
15. **Add/Erase**: Press to add or delete favorite channel.
16. **DTV**: Press to select Digital TV mode.
17. **0~9 Number Buttons**: In TV mode, press 0~9 to select a channel; the channel changes after 2 seconds. In DVD mode, press 0~9 to input the items.
18. **EPG**: Press to display EPG (Electronic Program Guide) menu.
19. **DOT**: Press number buttons with it to select the channels directly in DTV.
20. **Source**: Press to select the signal source.
21. **Recall**: Press to return previous channel.
22. **Enter**: To select an item, press Enter to confirm.
23. **VOL +/-**: Press to adjust the volume.
24. **CH +/-**: Press to scan through channels. To scan quickly through channels, press and hold down either channels.
25. <,∧,∨,>: Press <,∧,∨,> to move the on-screen cursor.

(Continued on next page)

26 **Menu**: Press to enter on-screen setup menu, press again to exit.
27 ◀◀, ▶▶ : Press to search the backward or forward.
28 ▶/II : Press to play or pause the DVD disc.
29 ■ : Press to stop playing the disc.
30 |◀◀, ▶▶| : Press to skip the backward or forward.
31 ⏏ : Press to open or close the disc tray.
32 **DVD Menu**: Press to return DVD disc menu.
33 **Prog.**: Press to display the program menu. Press it again to exit.
34 **Repeat**: Press repeatedly to cycle through the options: CHAPTER, TITLE, ALL and nothing.
35 **Subtitle**: Press to select desired DVD subtitle.
36 **Audio**: Press to select desired audio track.
37 **Setup**: Press to display a menu. Press it again to exit menu.
38 **Angle**: Press to select desired viewing angle of the Video (disc feature).
39 **Title**: Press to display to DVD disc title.
40 **DVD Info**: Press to display DVD information.
41 **Color Buttons**:
(Only available in DTV EPG mode)
Red: Press this button to access the red item or page.
Blue: Press this button to access the blue item or page.
Green: Press this button to access the green item or page.
Yellow: Press this button to access the yellow item or page.

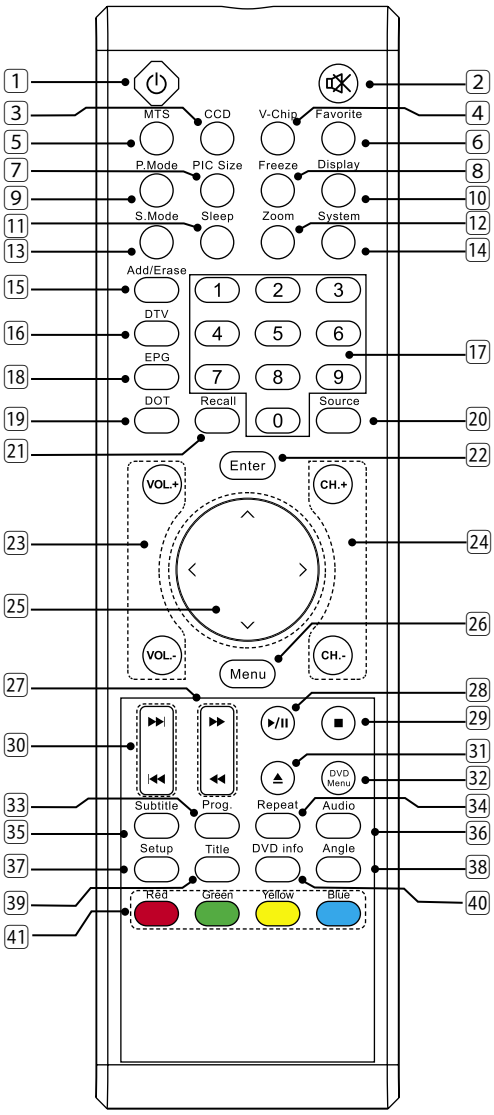

Note: Press CH+/- on the remote control can turn on TV set from last preview mode.

Reference No : LCT3201AD

Attachment 1： Electrical & Optical Specification

No.	*Items*	*Instruction*	*Typical*	*Limit*	*Unit*
1	Video sensitivity	For 30dB S/N	44	≤51	dBuV
2	FM sound sensitivity	For 30dB S/N	21	≤35	dBuV
3	Color sensitivity	For RF transmission	37	≤40	dBuV
4	CCD sensitivity	TV screen refreshes 40 times number of mistakes≤8	43	≤50	dBuV
5	Minimum NICAM threshold	Without crackline noise	N/A	N/A	dBuV
6	Stereo Channel Separation	BTSC.	18	≥15	dB
7	AGC static characteristic	Accept. Picture/Sound repr.	90	≥90	dBuV
8	Selectivity	Adjacent sound carrier	30	≥28	dB
		Below adjacent sound carrier	30	≥30	
		Adjacent picture carrier	45	≥40	
		Up adjacent picture carrier	40	≥30	
9	IF rejection		55	≥45	dB
10	Image rejection	VHF	57	≥45	dB
		UHF	55	≥40	
11	AFT pull-in range		±1.0	≥|±1.0|	MHz
12	Chroma sync pull-in range		±500	≥|±200|	Hz
13	Color killer function		-11	≤-10	dB

14	Resolution	RF	Horizontal	PAL	300	≥300	Lines
				NTSC	260	≥240	Lines
			Vertical	PAL	410	≥400	Lines
				NTSC	320	≥300	Lines
		Video	Horizontal		450	≥450	Lines
			Vertical		400	≥400	Lines

15	Color Coordination	White	Xw	Full Pattern	0.285	0.285±0.02	
			Yw		0.293	0.293±0.02	
16	View Angle(Lo/3)	Horizontal			170	≥170	Degree
		Vertical					
17	Overscan			Cross hatch signal	96	94~98	%
18	Picture position			In all direction	±2	≤|±3|	mm
19	H sync pull-in range				±400	≥|±200|	Hz
20	V sync pull-in range				6	≥6	Hz
21	Audio frequency response			±3dB ref. to 1KHz	0.15~12	0.2~12	KHz

22	Max Audio Output Power		7×2	≥5.0×2	W
23	Audio output power 10% THD	1KHz 10% THD	6×2	≥4.0×2	W
24	THD	Po=0.5W	0.5	≤3	%
25	Signal to buzz ratio	coeighting	50	≥30	dB
26	Minimum volume hum	coeighting	6	≤10	mVrms
27	Maximum woofer output power		N/A	N/A	W
28	Woofer audio frequency response	?3dB ref. to 15Hz AV mode	N/A	N/A	Hz
29	Tone low frequency	100Hz ref. to 1KHz AV mode	±8	≥|±3|	dB
30	Tone high frequency	10KHz ref. to 1KHz AV mode	±8	≥|±3|	dB
31	Balance	Center	0	≤|±2|	dB
		Max.	3	>2	
		Min.	-35	≤-30	

32	Video input level		1.0	1±0.3	Vpp
33	Audio input level*（1）		1.0 *	0.5±0.3	Vrms
34	Video output level		N/A	N/A	Vrms
35	Audio output level*（2）		0.3 *	0.5±0.3	Vrms
36	AV Audio input max. level		2	≤2	Vrms
37	AV Audio output L/R Separation		35	≥30	dB
38	Power consumption	Operating	200	≤200	W
		Stand by	3	≤5	W
39	IR receiving distance	0 Degree	7	≥6	m
40	IR receiving angle left/right	5m	60	≥45	Degree
	IR receiving angle Up/down		20	≥15	Degree
41	Dielectric strength	DC 3KV 1min.	5	≤10	mArms
42	The vibration noise from electromagnetic devices in LCD-TV set	The distance between the tester and the LCD-TV set is four times as many as the screen height	No obvious vibration noise can be heard		

Reference No : LCT3201AD

Test Condition

All tests shall be performed under the following conditions unless otherwise specified

1	**Picture Modulation**	**87.5%**
2	**Sound Modulation**	**27KHz Dev. For DK/I/BG** **15KHz Dev. For M/N**
3	**Picture to Sound Ratio**	**10dB**
4	**Sound Artificial Load Resistor**	**8 ohm**
5	**Video signal**	**Stair and Special**
6	**Audio signal**	**1KHz sine wave 0.5Vrms**
7	**Other conditions:** **A. Switch LCD-TV on and let it warm up for more than 30 minutes.** **Viewing distance: 3H (H: Panel High) in front of LCD, about 2M.** **B. Brightness, Contrast, Saturation, Tint, sharpness set at normal.** **C. RF test point: Video output.**	
8	**Note:** ***(1) Now this project cannot fit the limited spec. the typical audio input level is 1.0 Vrms,** ***(2) The audio out level is controlled by the volume level, the range is from 0 to 0.5Vrms.**	

DVD player's spec. For LCD-TV Combo

Division	Section	Remarks
General	name	AKAI
	Marketing Area(setup default language)	USA
	Power supply	+5v,+3.3v
	Power Consumption	15W
	Manufactruer of Loader mechanism	Foryou DL06-LS
DVD Module	Opitical Pick UP	Sanyo HD-62/65
	Chipset used	MTK 1389FE
Playback Disc Type	Playable Media Type	Playable Disc Type: DVD, CD,
	Playable Disc Type	DVD(Single/ Dual layer, Double sided), CD
	Disc Size	8cm/12cm
	Regional code	Regional 1
	NTSC/ PAL Disc playback	O/O
Video	Video output signal	NTSC
	Video DAC	27MHz/ 10bit
Audio	Audio DAC	48Khz/ 96KHz/24-bit:selectable
	Dynamic range	Present
	Dolby digital decoder	Present
	DTS decoder	optional
	SRS + TruSurround for 2 channel	Not present
	3D Virtual surround for 2 channel	Not present
Playback Features	Fast forward/backward	x2,x4,x8,x16,x32
	Slow motion forward	x1/2,x1/4,x1/8,x1/16
	Slow motion backward	optional
	Still picture	Present
	Frame by frame forward/reverse	Forward only (Step function)
	Skip forward/reverse	Present
	Repeat function	Present
	DVD closed caption	Present
	Transition Effect for picture CD	Not present
	Rotation of picture for picture CDs	Present
	Last Memory	Present
Display user operation	Graphical user interface	Not present
	OSD Language	3 (ENG is base ,SPA and French)
	Subtitle	Present
	Screen saver	Present
	Resume play	Present
	Program function	Present
	PBC ON/OFF	Default on PCB
	Parental lock	Passward : 0000
	Picture mode selector	16:9, 4:3 LB, 4:3 PS(4:3 PS as default)
	Intro scan	Not present
	Digest in VCD	Present, only for PIC CD
	Time search	Present
	Multi angle	Present
	Selectable audio language streams	Present
Front Panel	kalaoke function	x
	VFD/ LED	x
	No. of keys	3(Open/Close, Play, Stop)
Rear Panel	Composite Video output	x
	Component Video output	x
	Progressive scan output (480P)	Present
	2 channel audio output	Present
	Coaxial audio output	Present

ATSC SYSTEM

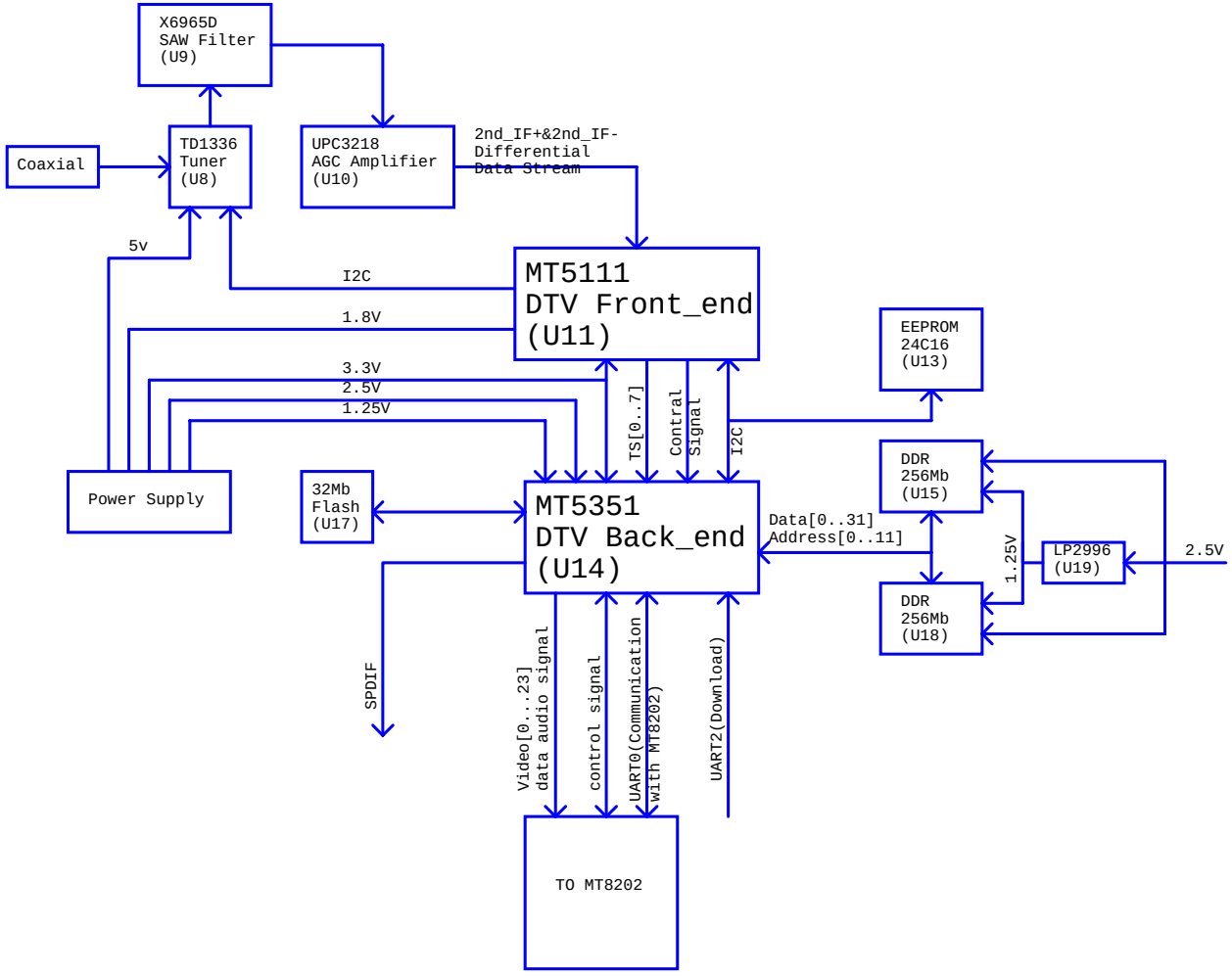

KAWA Confidential

ZhongShan KAWA Electronic Inc.

Title: MT5351 Block			
Size: C	Document Number: AKAI_MT8202_MT5351_V1.0	Drawn: <Designer>	Rev: 1
		Checked: <Checker>	
Date: Friday, March 17, 2006		Sheet 1 of 2	

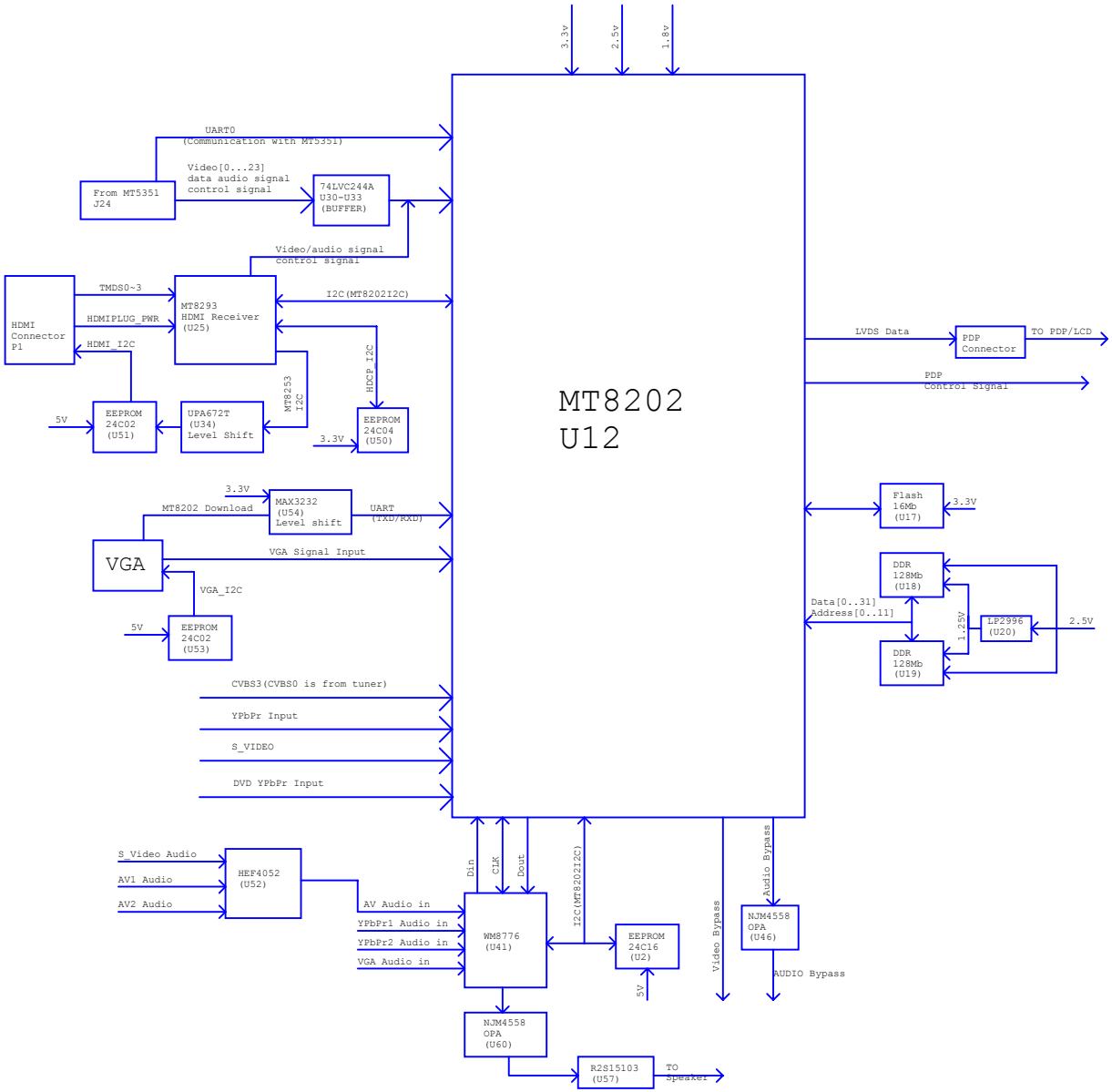

KAWA Confidential

ZhongShan KAWA Electronic Inc.

Title	MT8202 Block		
Size: D	Document Number: AKAI_MT8202_MT8351_V1.0	Drawn: <Designer>	Rev: 1
		Checked: <Checker>	
Date: Friday, March 17, 2006		Sheet 2 of 2	

Combo DVD

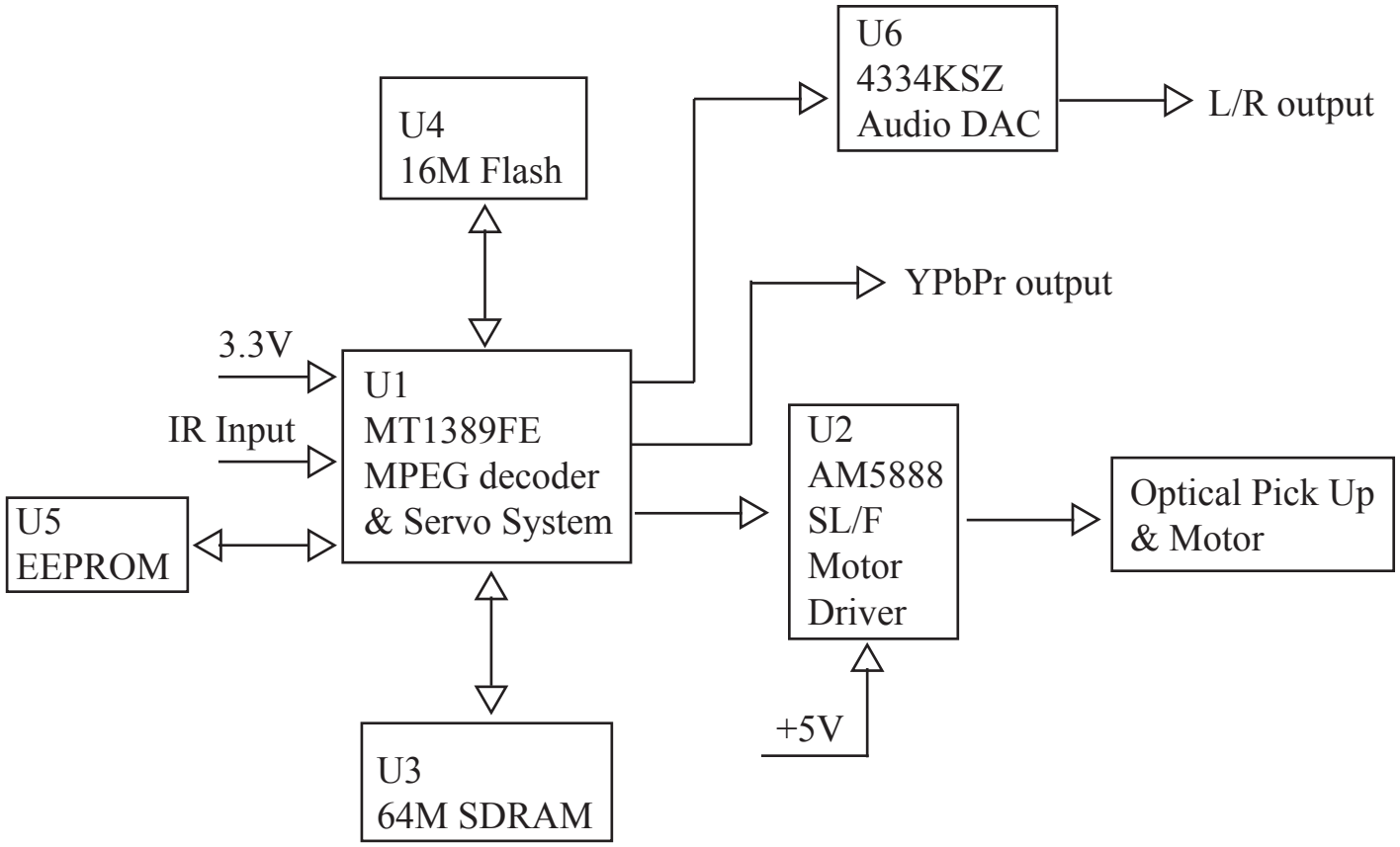
U6
4334KSZ
Audio DAC
L/R output
U4
16M Flash
YPbPr output
3.3V
U1
MT1389FE
MPEG decoder
& Servo System
IR Input
U2
AM5888
SL/F
Motor
Driver
Optical Pick Up
& Motor
U5
EEPROM
+5V
U3
64M SDRAM

Parts Position

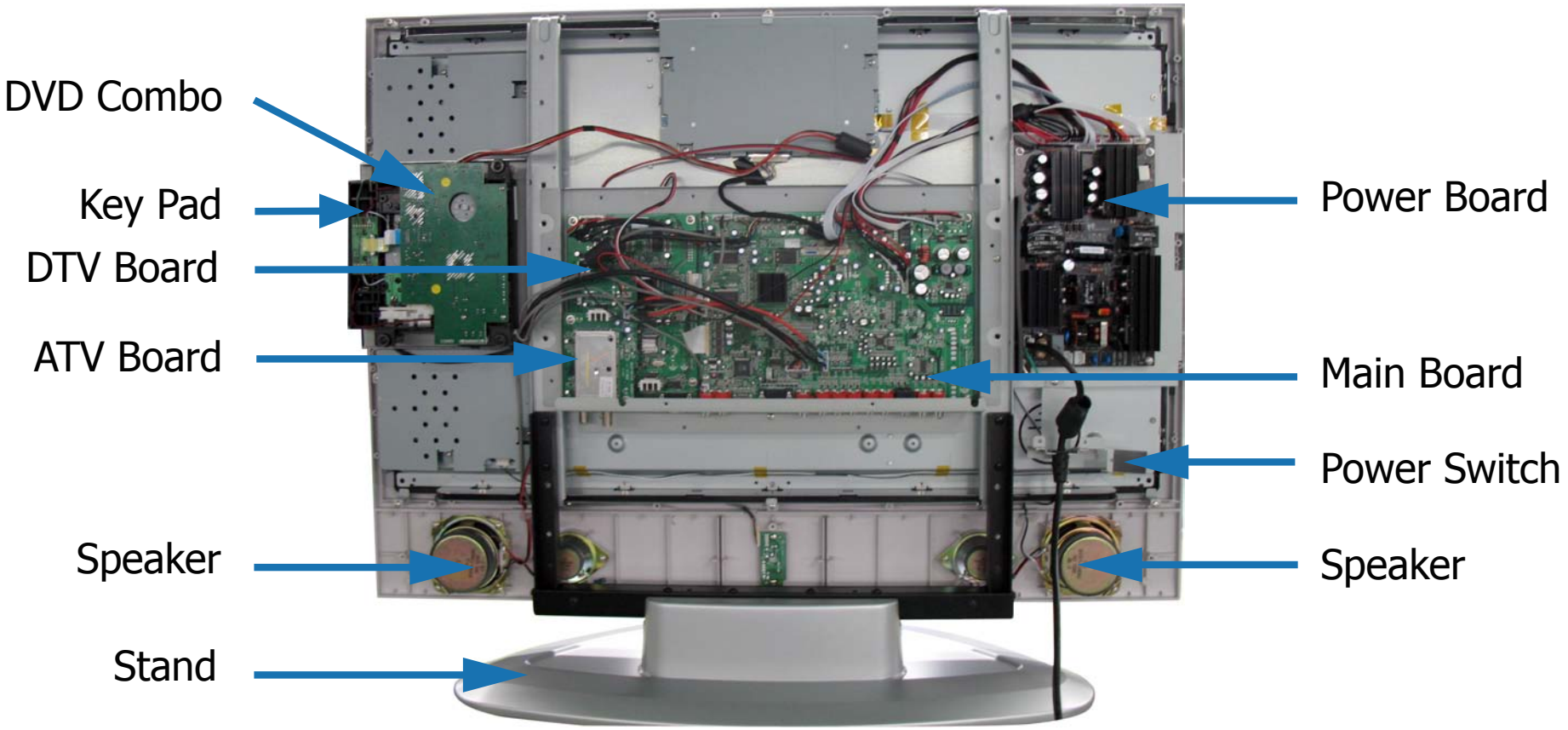

MT8202E (PBGA388) LCDTV BOARD 4 LAYERS FOR AKAI

1. INDEX / POWER / RESET / EEPROM
2. LDO
3. MT8202E PBGA388
4. MT8202 DECOUPLING
5. DDR MEMORY & FLASH
6. MT5351 INTERFACE
7. HDMI MT8293
8. DAUGHTER BOARD IN
9. WM8776 & VIDEO BYPASS
10. AUDIO / VIDEO IN CIRCUIT
11 . VGA & PC AUDIO IN
12. LVDS OUT
13. BACK LIGHT / KEYPAD
14. TUNER IN
15. AV IN
16. AUDIO IN
17.AUDIO Amplifier

Rev	History	P#	Date
AKAI_MT8202_27US_LVDS_V0.0	New		2005/11/22
AKAI_MT8202_27US_HDMI_LVDS_V0.0	ADD HDMI / VIDEO /AUDIO CONNECTOR INPUT IN		

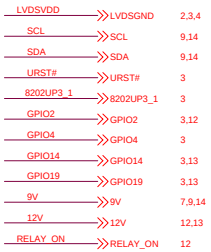

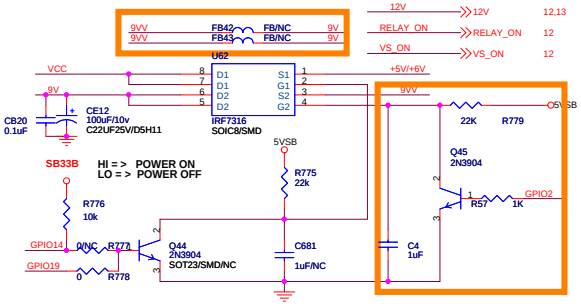

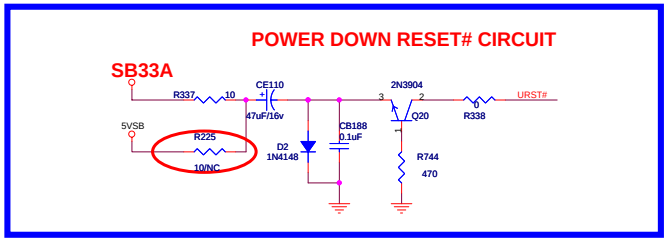

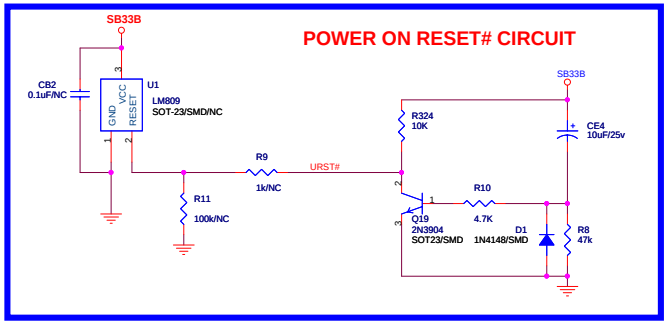

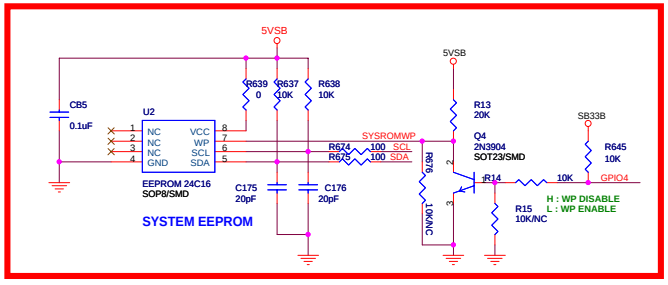

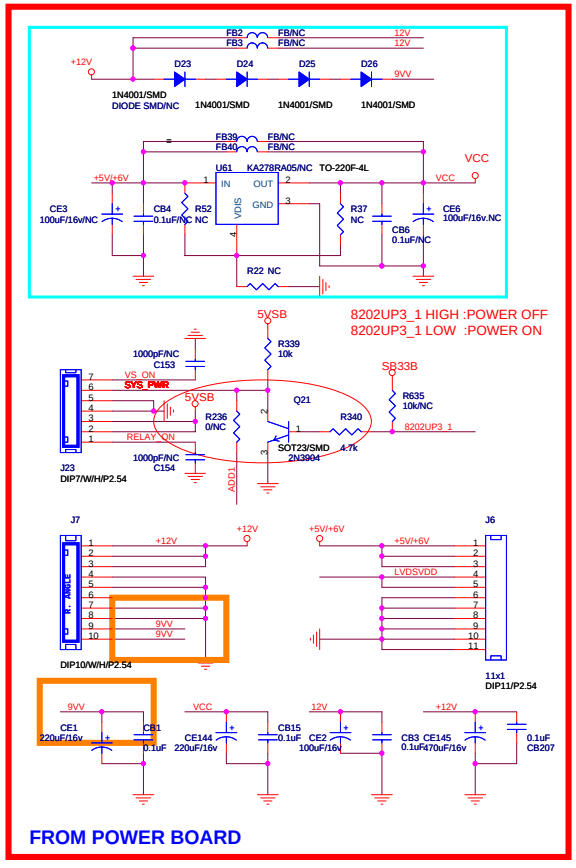

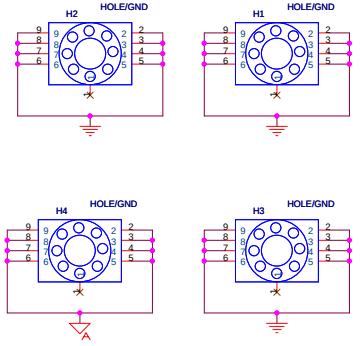

KAWA Confidential

Title: INDEX / POWER / RESET / EEPROM			
Size: C	Document Number: AKAI_MT8202_27US_LVDS_V0.0	<Designer>	Rev: 1
		Checked: <Checker>	
Date: Thursday, April 13, 2006		Sheet 1	17

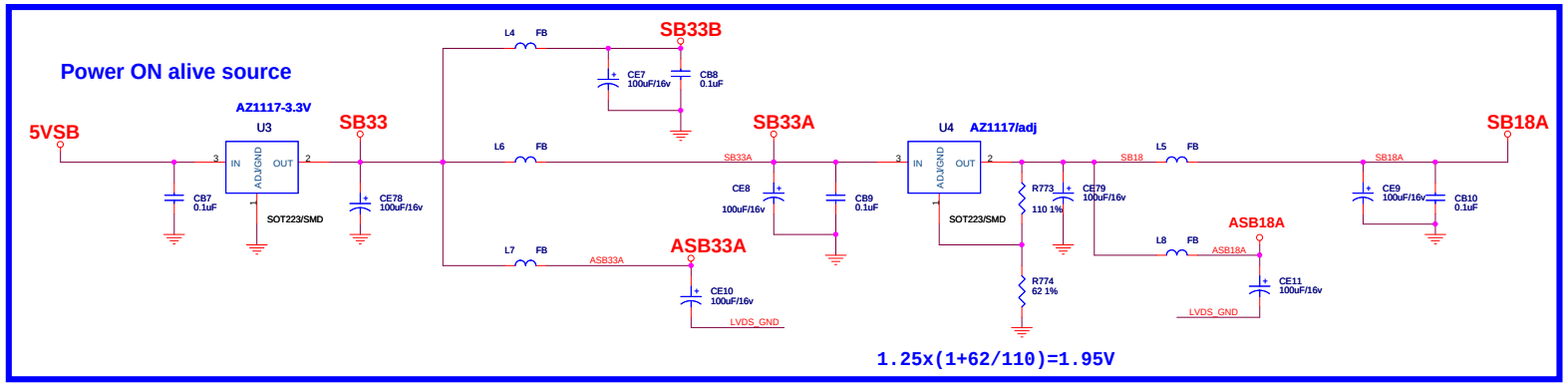

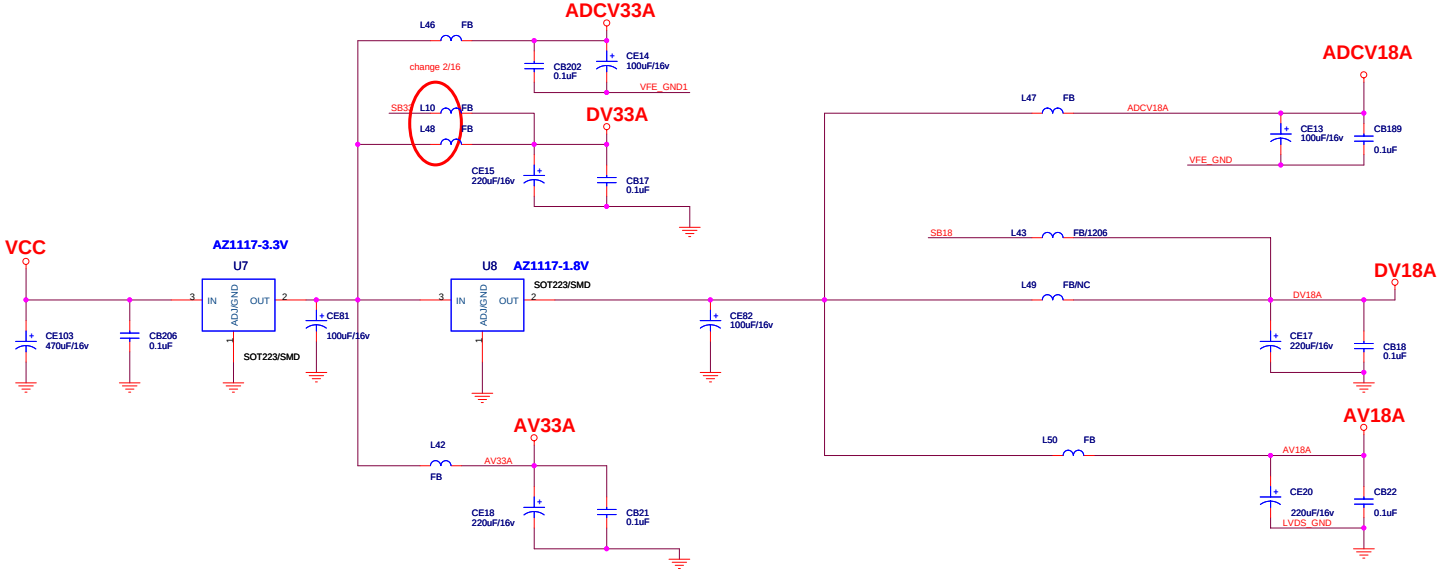

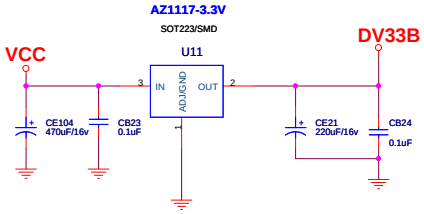

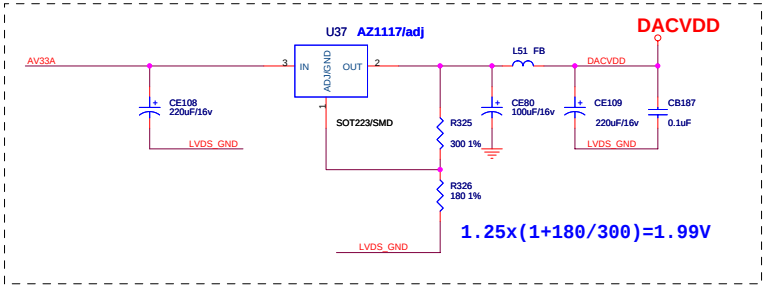

LVDS_GND >> LVDS_GND 3,4,12

VFE_GND >> VFE_GND 3,4,8,11

VFE_GND1 >> VFE_GND1 3,4,8,11

KAWA Confidential

Title: LDO			
Size: C	Document Number: AKAI_MT8202_27US_LVDS_V0.0	<Designer>	Rev: 1
		Checked: <Checker>	
Date: Thursday, April 13, 2006		Sheet 2 of 17	

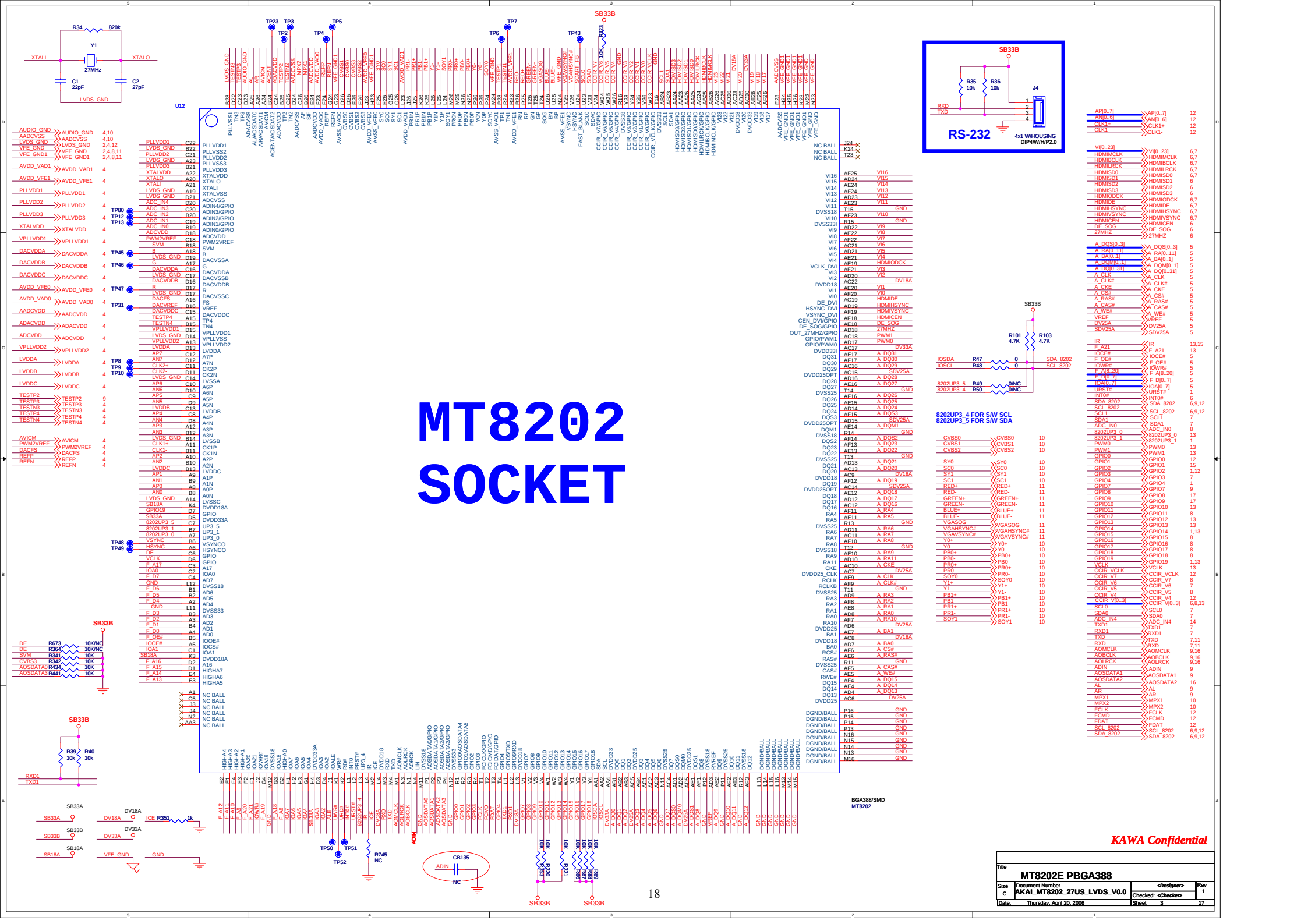
MT8202
SOCKET
U12
SB33B
RS-232
4x1 W/HOUSING
DIP4/W/H/P2.0
J4
R35 10k
R36 10k
RXD
TXD
R101 4.7K
R103 4.7K
R47 0
R48 0
SDA_8202
SCL_8202
R49 0/NC
R50 0/NC
8202UP3_4 FOR S/W SCL
8202UP3_5 FOR S/W SDA
Y1
27MHz
C1 22pF
C2 27pF
R34 820k
LVDS_GND
XTALI
XTALO
BGA388/SMD
MT8202
KAWA Confidential
MT8202E PBGA388
Document Number
AKAI_MT8202_27US_LVDS_V0.0
Rev 1
Thursday, April 20, 2006
Sheet 3 17
18

STANDBY ANALOG POWER

ASB18A

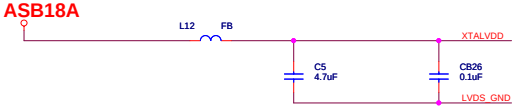

ASB33A

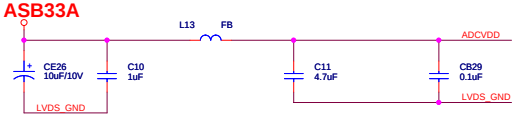

NORMAL VIDEO DAC POWER

DACVDD

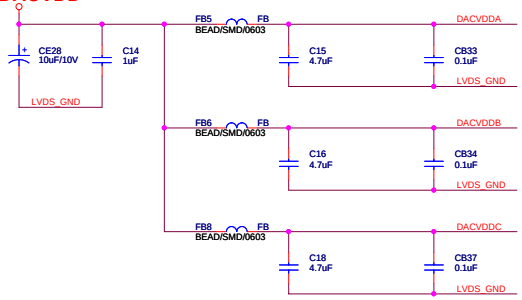

NORMAL VIDEO DAC POWER

AV33A

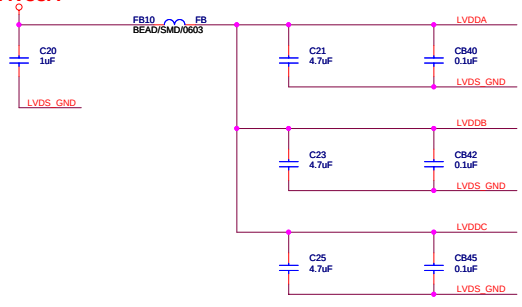

NORMAL AUDIO ADC / DAC POWER

ADCV33A

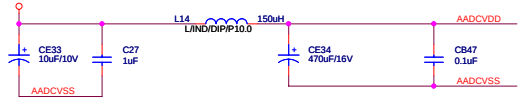

ADCV33A

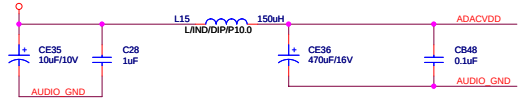

NORMAL ANALOG POWER

ASB18A

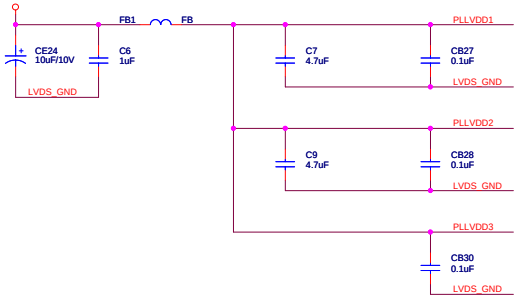

AV18A

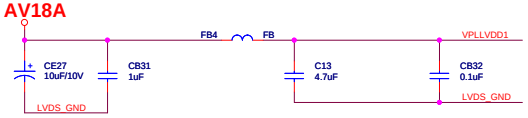

AV33A

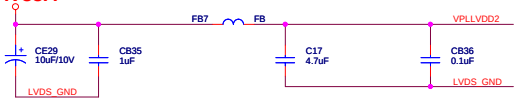

NORMAL VIDEO ADC POWER

ADCV33A

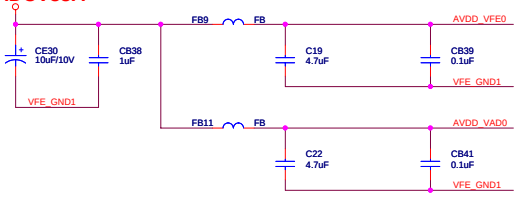

ADCV18A

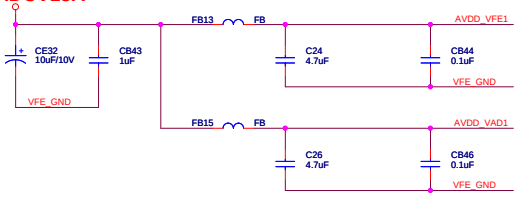

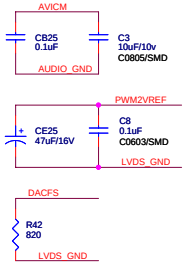

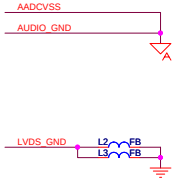

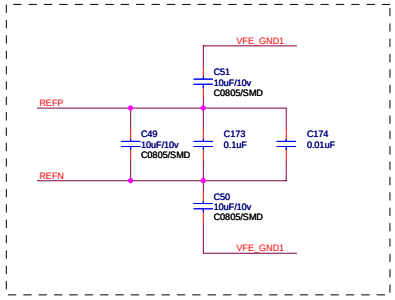

TESTP3	R43	49.9 1%	PLLVDD1
TESTN3	R44	49.9 1%	PLLVDD1
TESTP4	R45	49.9 1%	VPLLVDD1
TESTN4	R46	49.9 1%	VPLLVDD1

MT8202 DIGITAL POWER & DECOUPLING

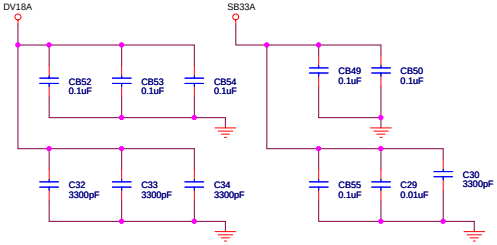

PUT ON NEARLY BGA

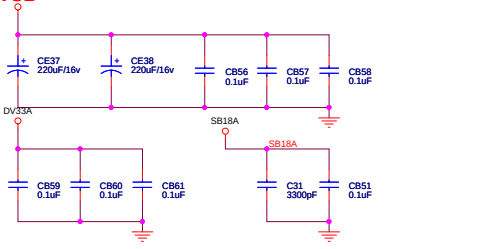

KAWA Confidential

Title	MT8202 DECOUPLING		
Size C	Document Number AKAI_MT8202_27US_LVDS_V0.0	<Designer>	Rev 1
		Checked: <Checker>	
Date: Thursday, April 13, 2006		Sheet 4	17

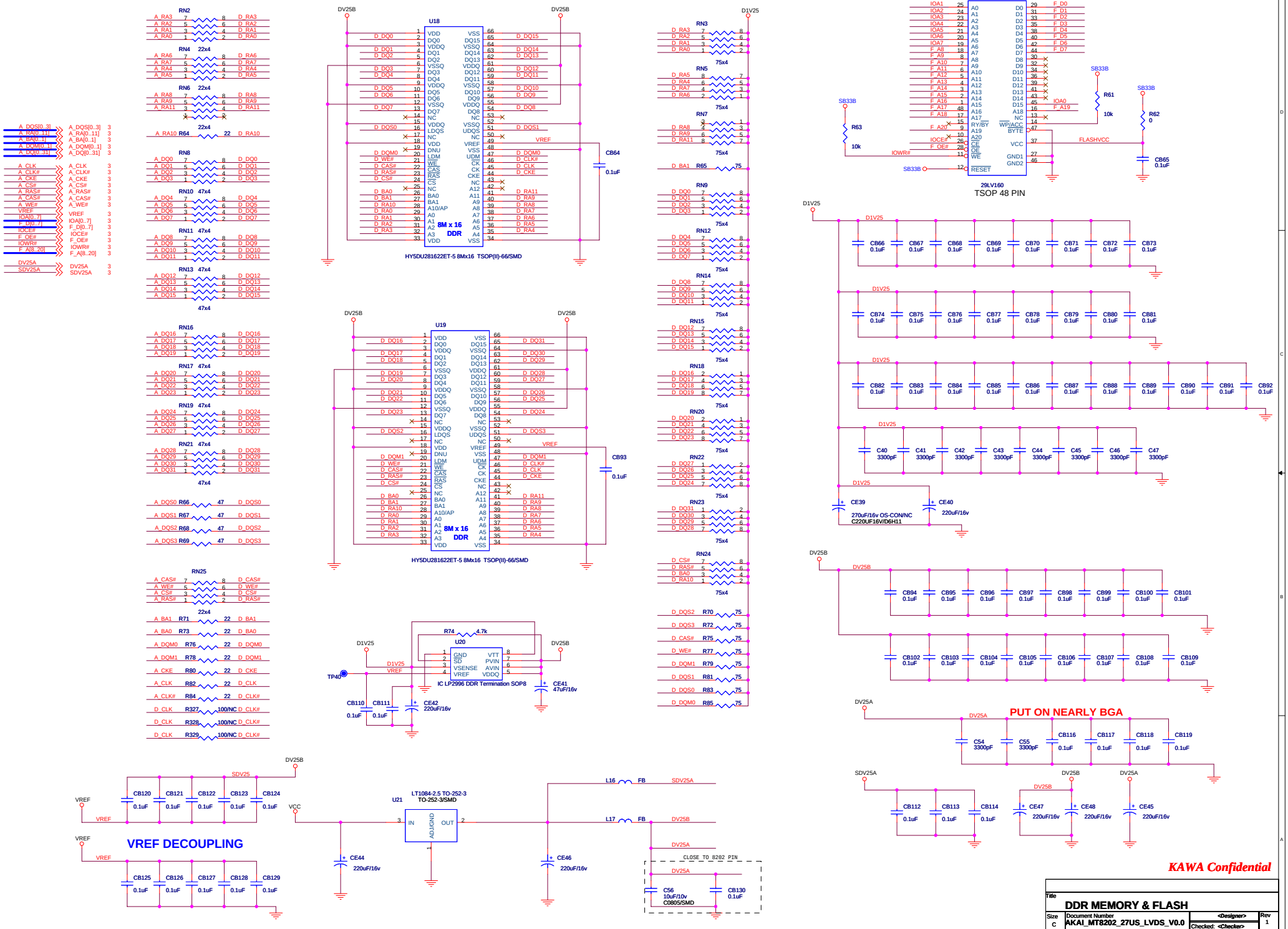
RN2
RN4 22x4
RN6 22x4
RN8
RN10 47x4
RN11 47x4
RN13 47x4
RN16
RN17 47x4
RN19 47x4
RN21 47x4
RN25
R64 22
R66 47
R67 47
R68 47
R69 47
R71 22
R73 22
R76 22
R78 22
R80 22
R82 22
R84 22
R327 100/NC
R328 100/NC
R329 100/NC
U18
U19
8M x 16 DDR
HY5DU281622ET-5 8Mx16 TSOP(II)-66/SMD
RN3
RN5 75x4
RN7 75x4
RN9 75x4
RN12 75x4
RN14 75x4
RN15 75x4
RN18 75x4
RN20 75x4
RN22 75x4
RN23 75x4
RN24 75x4
R65 75
R70 75
R72 75
R75 75
R77 75
R79 75
R81 75
R83 75
R85 75
U20
R74 4.7k
IC LP2996 DDR Termination SOP8
U21
LT1084-2.5 TO-252-3
TO-252-3/SMD
U17
29LV160
TSOP 48 PIN
R61 10k
R62 0
R63 10k
CB64 0.1uF
CB93 0.1uF
CE41 47uF/16v
CE42 220uF/16v
CE44 220uF/16v
CE46 220uF/16v
CB65 0.1uF
CE39 270uF/16v OS-CON/NC C220UF16V/D6H11
CE40 220uF/16v
C40 3300pF
C41 3300pF
C42 3300pF
C43 3300pF
C44 3300pF
C45 3300pF
C46 3300pF
C47 3300pF
CB54 3300pF
CB55 3300pF
CB112 0.1uF
CB113 0.1uF
CB114 0.1uF
CE47 220uF/16v
CE48 220uF/16v
CE45 220uF/16v
CB56 10uF/10v C0805/SMD
CB130 0.1uF
CLOSE TO 8202 PIN
PUT ON NEARLY BGA
VREF DECOUPLING
KAWA Confidential
DDR MEMORY & FLASH
AKAI_MT8202_27US_LVDS_V0.0
Thursday, April 13, 2006

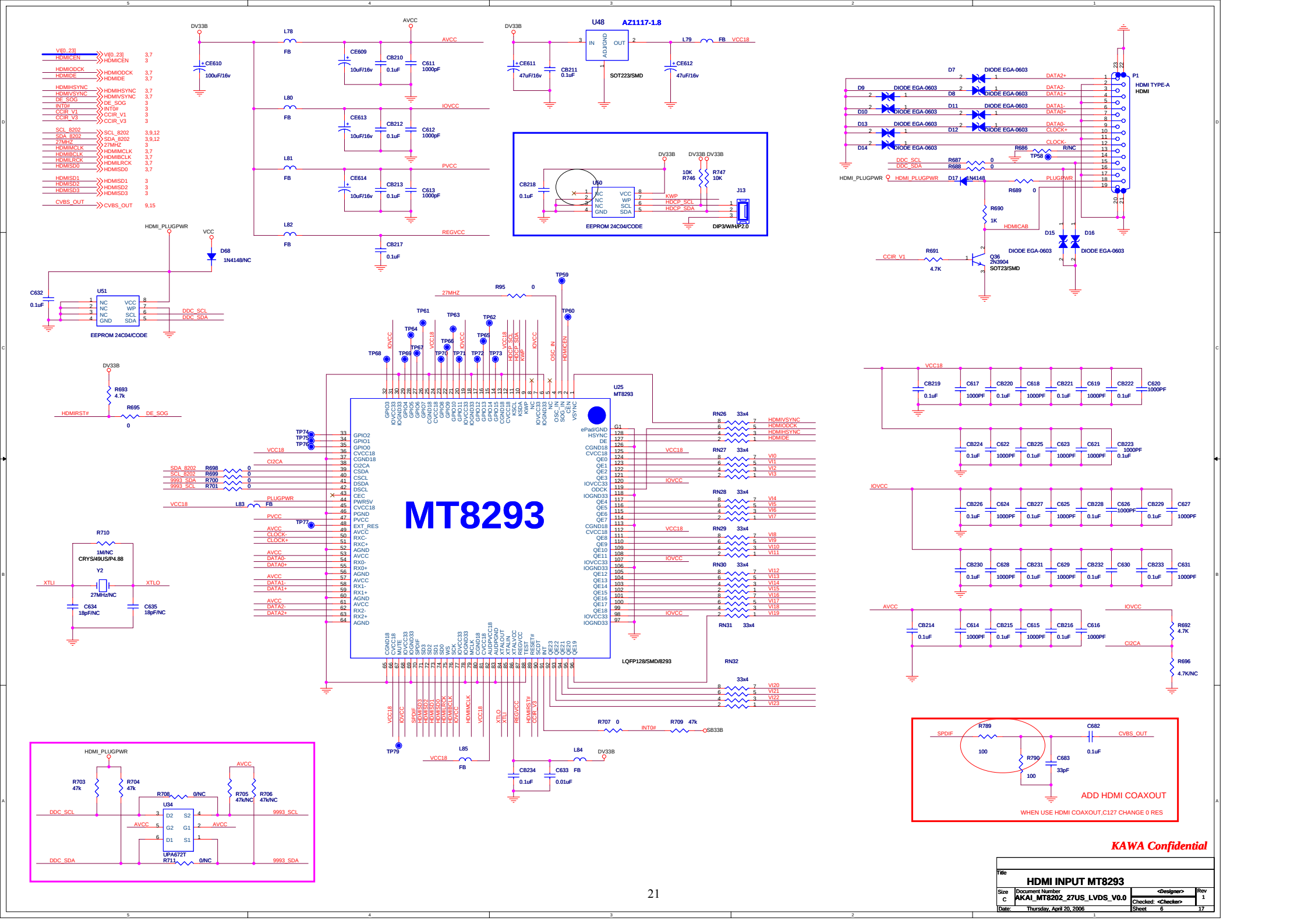
MT8293
U48 AZ1117-1.8
SOT223/SMD
EEPROM 24C04/CODE
DIP3/W/HP2.0
HDMI TYPE-A
HDMI
LQFP128/SMD/8293
ADD HDMI COAXOUT
WHEN USE HDMI COAXOUT,C127 CHANGE 0 RES
KAWA Confidential
HDMI INPUT MT8293
Document Number
AKAI_MT8202_27US_LVDS_V0.0
Thursday, April 20, 2006

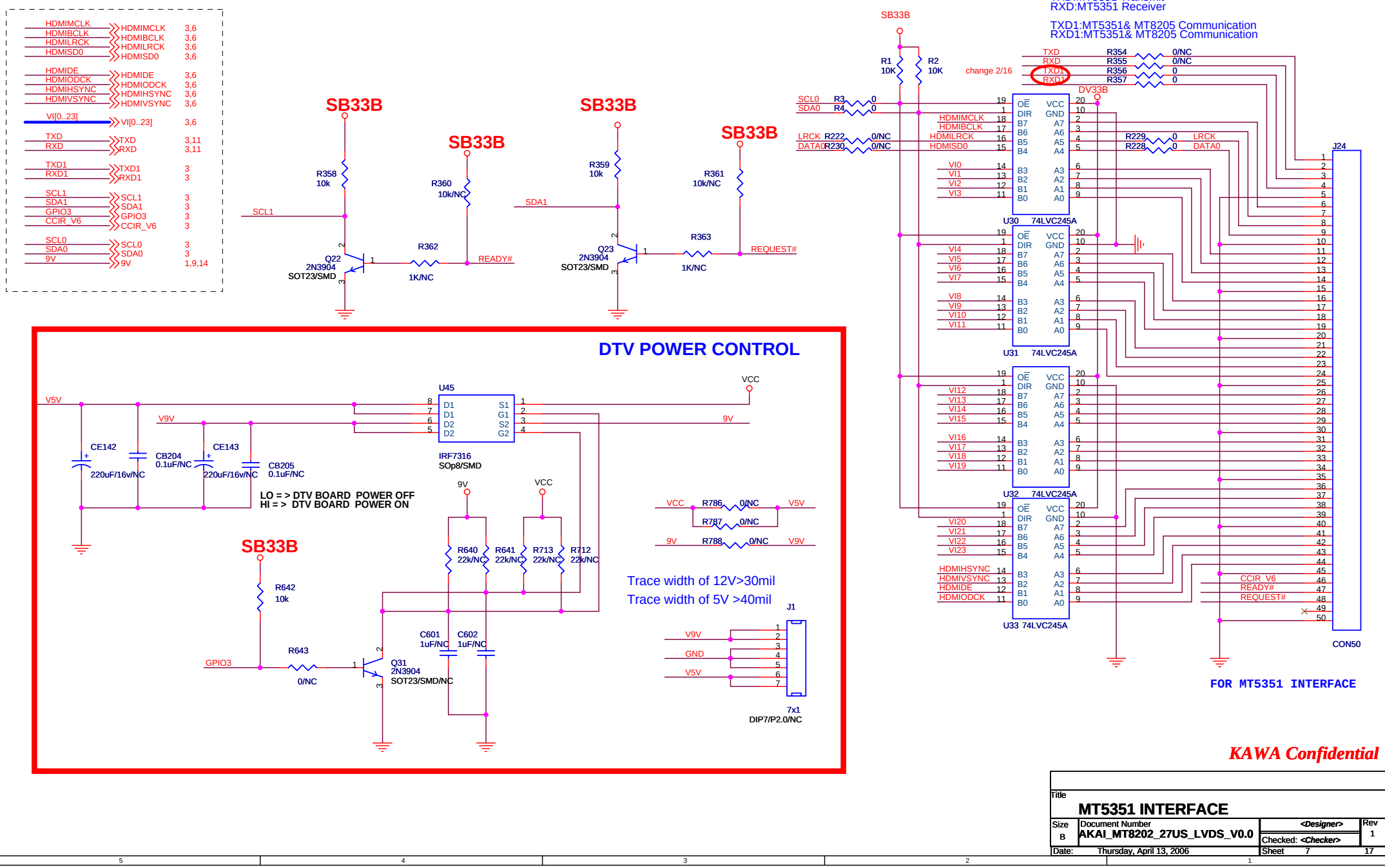
HDMIMCLK 3,6
HDMIBCLK 3,6
HDMILRCK 3,6
HDMISD0 3,6
HDMIDE 3,6
HDMIODCK 3,6
HDMIHSYNC 3,6
HDMIVSYNC 3,6
VI[0..23] 3,6
TXD 3,11
RXD 3,11
TXD1 3
RXD1 3
SCL1 3
SDA1 3
GPIO3 3
CCIR_V6 3
SCL0 3
SDA0 3
9V 1,9,14
SB33B
R358 10k
R360 10k/NC
SCL1
Q22 2N3904 SOT23/SMD
R362
1K/NC
READY#
R359 10k
SDA1
Q23 2N3904 SOT23/SMD
R363
1K/NC
R361 10k/NC
REQUEST#
DTV POWER CONTROL
V5V
V9V
CE142 220uF/16v/NC
CB204 0.1uF/NC
CE143 220uF/16v/NC
CB205 0.1uF/NC
LO = > DTV BOARD POWER OFF
HI = > DTV BOARD POWER ON
U45
IRF7316 SOp8/SMD
VCC
9V
R640 22k/NC
R641 22k/NC
R713 22k/NC
R712 22k/NC
R642 10k
R643 0/NC
GPIO3
Q31 2N3904 SOT23/SMD/NC
C601 1uF/NC
C602 1uF/NC
R786 0/NC
R787 0/NC
R788 0/NC
Trace width of 12V>30mil
Trace width of 5V >40mil
J1
7x1 DIP7/P2.0/NC
TXD:MT5351 Transmit
RXD:MT5351 Receiver
TXD1:MT5351& MT8205 Communication
RXD1:MT5351& MT8205 Communication
change 2/16
R1 10K
R2 10K
R354 0/NC
R355 0/NC
R356 0
R357 0
DV33B
SCL0 R3 0
SDA0 R4 0
LRCK R222 0/NC
DATA0 R230 0/NC
R229 0 LRCK
R228 0 DATA0
U30 74LVC245A
U31 74LVC245A
U32 74LVC245A
U33 74LVC245A
J24
CON50
CCIR_V6
READY#
REQUEST#
FOR MT5351 INTERFACE
KAWA Confidential
Title
MT5351 INTERFACE
Size B
Document Number AKAI_MT8202_27US_LVDS_V0.0
<Designer>
Checked: <Checker>
Rev 1
Date: Thursday, April 13, 2006
Sheet 7 17

INPUT

ADC_IN0	ADC_IN0	3
CCIR_V0	CCIR_V0	3
CCIR_V5	CCIR_V5	3
CCIR_V7	CCIR_V7	3
GPIO11	GPIO11	3
GPIO15	GPIO15	3
GPIO16	GPIO16	3
GPIO17	GPIO17	3
GPIO18	GPIO18	3
VFE_GND	VFE_GND	2,3,4,11
AADCVSS	AADCVSS	3,4,10
AV1_R	AV1_R	15
AV1_L	AV1_L	15
AV2_R	AV2_R	15
AV2_L	AV2_L	15
SY_R	SY_R	15
SY_L	SY_L	15
Y2_INB	Y2_INB	15
Y2_GNDB	Y2_GNDB	10,15
CB2_INB	CB2_INB	15
CB2_GNDB	CB2_GNDB	10,15
CR2_INB	CR2_INB	15
CR2_GNDB	CR2_GNDB	10,15
Y3_INB	Y3_INB	15
Y3_GNDB	Y3_GNDB	15
CB3_INB	CB3_INB	15
CB3_GNDB	CB3_GNDB	15
CR3_INB	CR3_INB	15
CR3_GNDB	CR3_GNDB	15
9V	9V	1,7,9,14

OUTPUT

AV_R	AV_R	9
AV_L	AV_L	9
YQ	YQ	10
CBQ	CBQ	10
CRQ	CRQ	10
YQ_GND	YQ_GND	10
CBQ_GND	CBQ_GND	10
CRQ_GND	CRQ_GND	10

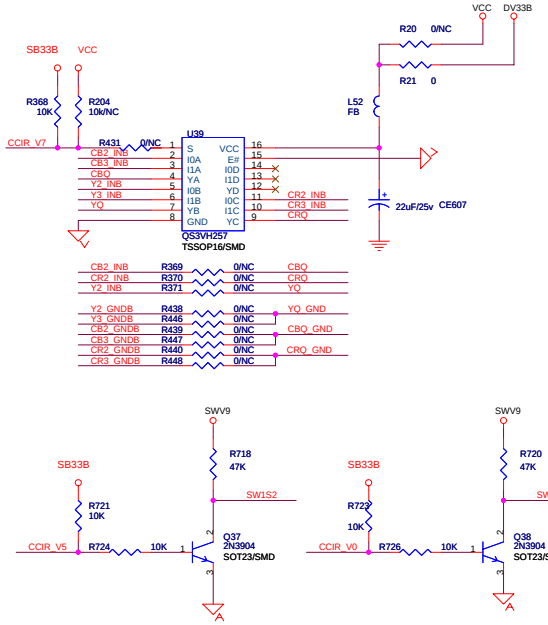

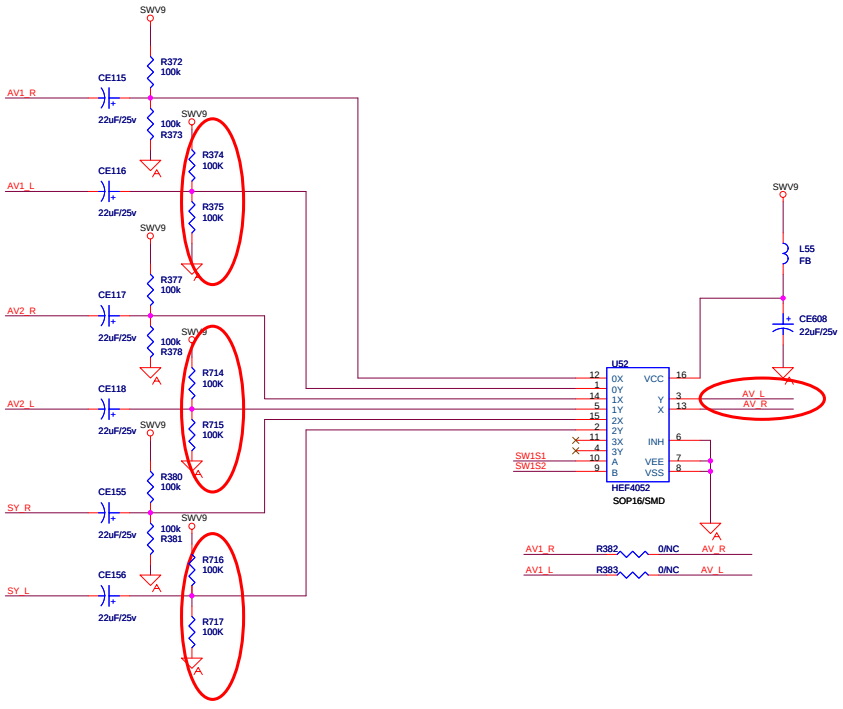

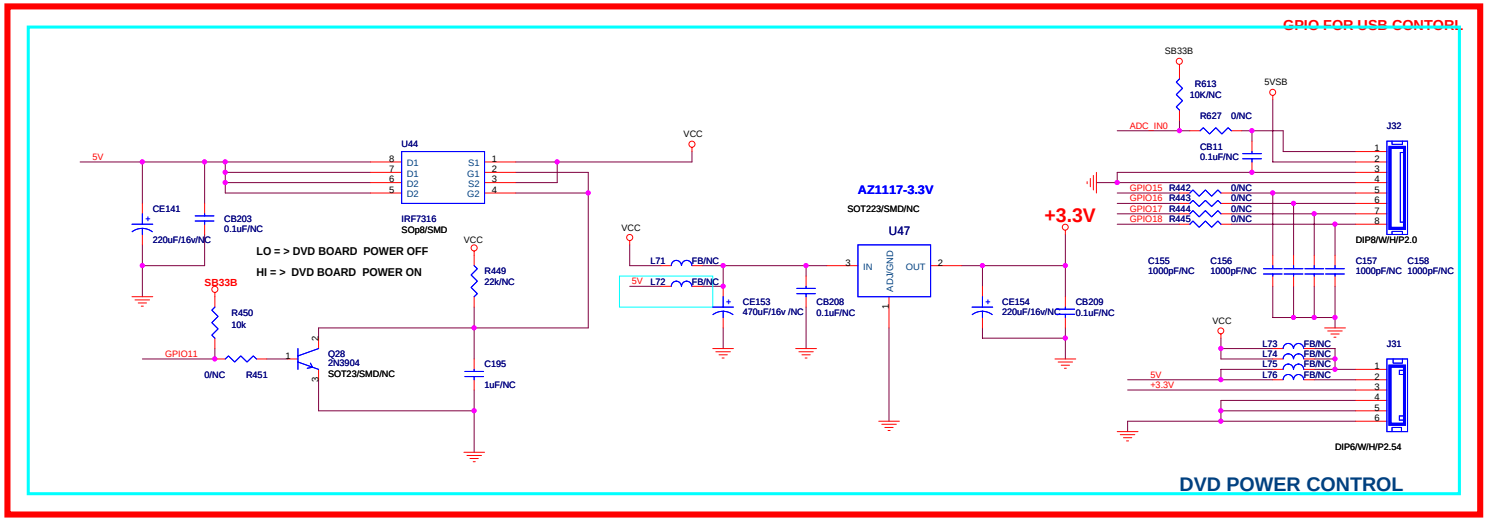

KAWA Confidential

Title: DAUGHTER BOARD IN			
Size: C	Document Number: AKAI_MT8202_27US_LVDS_V0.0	<Designer>	Rev: 1
		Checked: <Checker>	
Date: Thursday, April 13, 2006		Sheet 8	17

INPUT

GPIO7	GPIO7	3
SCL	SCL	1,14
SDA	SDA	1,14
SDA_8202	SDA_8202	3,6,12
SCL_8202	SCL_8202	3,6,12
AOSDATA1	AOSDATA1	3
AOMCLK	AOMCLK	3,16
AOBCLK	AOBCLK	3,16
AOLRCK	AOLRCK	3,16
ADIN	ADIN	3
AV_R	AV_R	8
AV_L	AV_L	8
YPBPR1_L	YPBPR1_L	15
YPBPR1_R	YPBPR1_R	15
YPBPR2_R	YPBPR2_R	15
YPBPR2_L	YPBPR2_L	15
YPBPR3_R	YPBPR3_R	15
YPBPR3_L	YPBPR3_L	15
VGAR_IN	VGAR_IN	11
VGAL_IN	VGAL_IN	11
TESTP2	TESTP2	3
AR	AR	3
AL	AL	3
MU	MU	16
A_MUTE	A_MUTE	17
9V	9V	1,7,14

OUTPUT

AUSPR	AUSPR	16
AUSPL	AUSPL	16
AVR_OUT	AVR_OUT	15
AVL_OUT	AVL_OUT	15
CVBS_OUT	CVBS_OUT	6,15

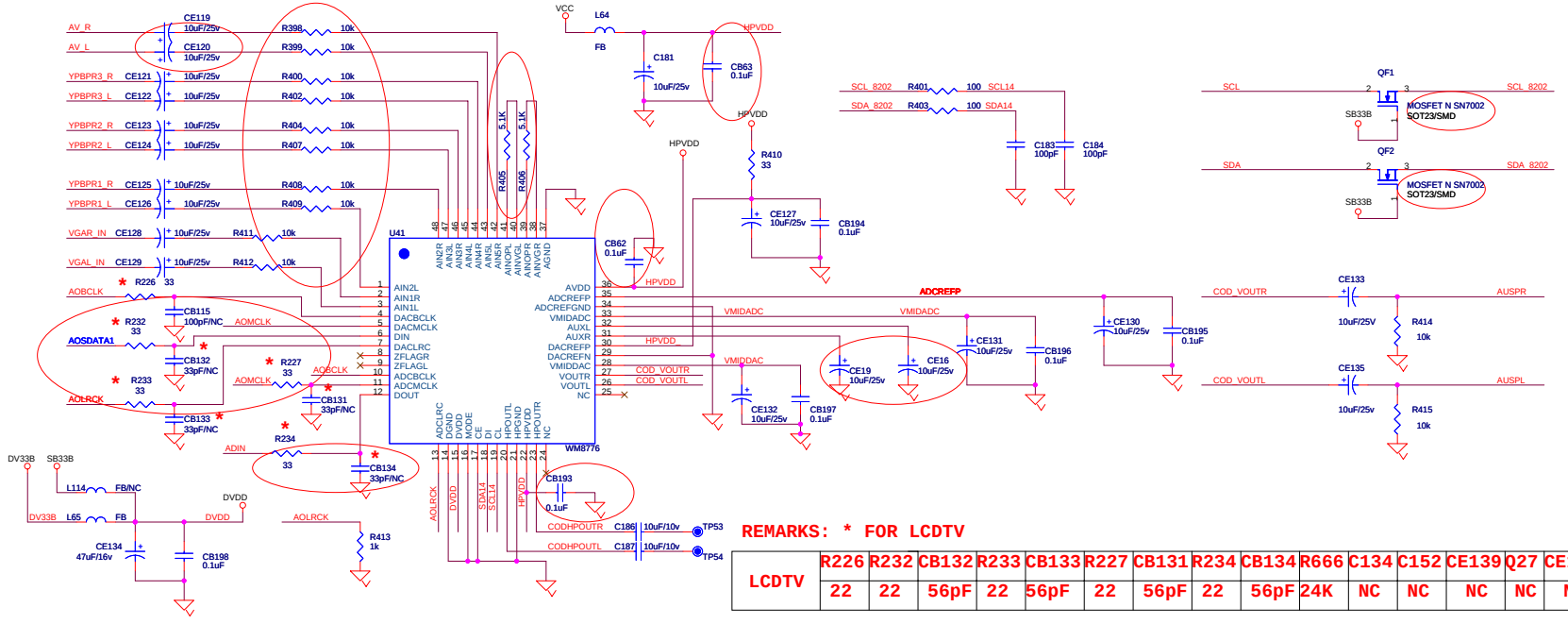

REMARKS: * FOR LCDTV

	R226	R232	CB132	R233	CB133	R227	CB131	R234	CB134	R666	C134	C152	CE139	Q27	CE140	CE138
LCDTV	22	22	56pF	22	56pF	22	56pF	22	56pF	24K	NC	NC	NC	NC	NC	NC

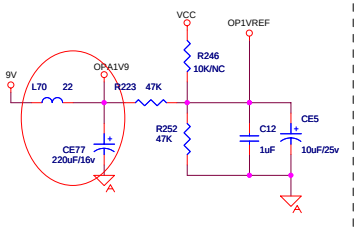

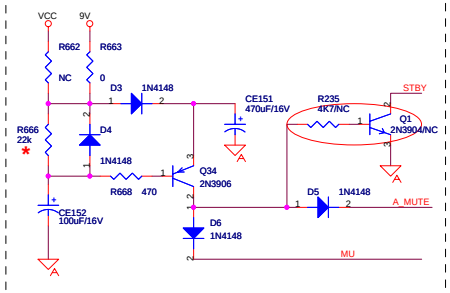

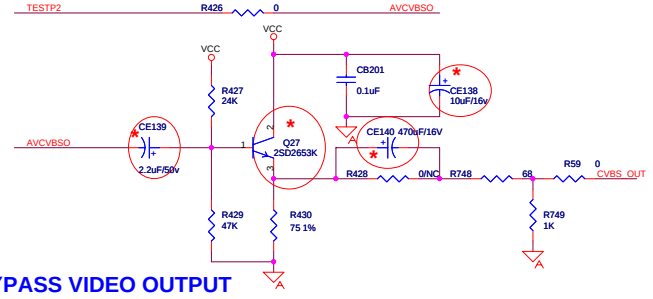

BYPASS VIDEO OUTPUT

AUDIO BYPASS MUTE

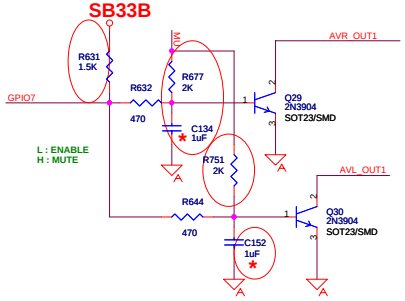

BYPASS AUDIO OUTPUT

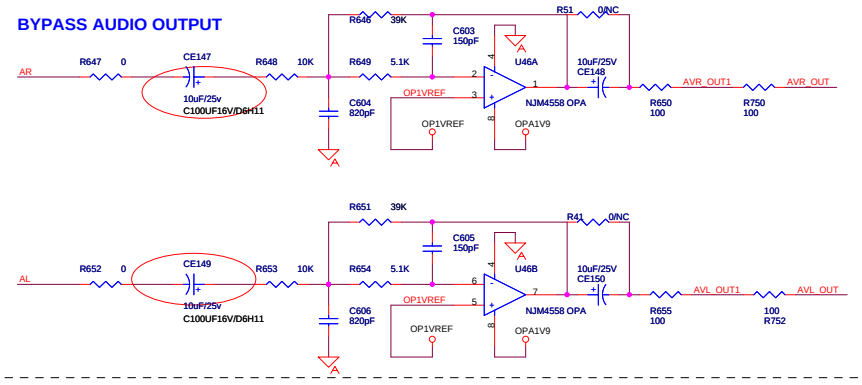

KAWA Confidential

Title	M8776 & VIDEO BYPASS		
Size C	Document Number AKAI_MT8202_27US_LVDS_V0.0	<Designer> Checked: <Checker>	Rev 1
Date: Saturday, April 22, 2006		Sheet 9	17

CVBS0 CVBS0 3
CVBS1 CVBS1 3
CVBS2 CVBS2 3

SY0 SY0 3
SC0 SC0 3

SY1 SY1 3
SC1 SC1 3

Y0+ Y0+ 3
Y0- Y0- 3
PB0+ PB0+ 3
PB0- PB0- 3
PR0+ PR0+ 3
PR0- PR0- 3
SOY0 SOY0 3

Y1+ Y1+ 3
Y1- Y1- 3
PB1+ PB1+ 3
PB1- PB1- 3
PR1+ PR1+ 3
PR1- PR1- 3
SOY1 SOY1 3

MPX1 MPX1 3

MPX2 MPX2 3

TO MT8202

TV_GND TV_GND 14
CVBS_0 CVBS_0 14
SIF SIF 14
AF AF 14
CVBS_1 CVBS_1 15
CVBS1_GND CVBS1_GND 15
CVBS_2 CVBS_2 15
CVBS2_GND CVBS2_GND 15
SY_1 SY_1 15
SY_1_GND SY_1_GND 15
SC_1 SC_1 15
SC_1_GND SC_1_GND 15
SY_0 SY_0 15
SY_0_GND SY_0_GND 15
SC_0 SC_0 15
SC_0_GND SC_0_GND 15

SOY1 SOY1 3
SOY0 SOY0 3
Y1_INB Y1_INB 15
Y1_GNDB Y1_GNDB 8,15
CR1_INB CR1_INB 15
CR1_GNDB CR1_GNDB 8,15
CB1_INB CB1_INB 15
CB1_GNDB CB1_GNDB 8,15
CBQ CBQ 8
CRQ CRQ 8
YQ YQ 8
YQ_GND YQ_GND 8
CBQ_GND CBQ_GND 8
CRQ_GND CRQ_GND 8

FROM AV BOARD

AADCVSS AADCVSS 3,4

THIS PAGE NEARLY IC

CVBS_0 R197 0 C110 47nF CVBS0
C113 330pF TV_GND

CVBS_1 R200 0 C117 47nF CVBS1
C120 330pF CVBS1_GND

CVBS_2 R424 0 C188 47nF CVBS2
C189 330pF CVBS2_GND

SY_0 R198 0 C111 47nF SY0
C114 330pF SY_0_GND

SC_0 R201 0 C118 47nF SC0
C121 330pF SC_0_GND

SY_1 R205 0 C125 47nF SY1
C128 330pF SY_1_GND

SC_1 R209 0 C132 47nF SC1
C135 330pF SC_1_GND

R55 0 C112 4.7nF SOY0

YQ R199 68 C115 100nF Y0+
C116 15pF
YQ_GND R202 100 C119 100nF Y0-

CBQ R203 68 C122 100nF PB0+
C123 15pF
CBQ_GND R206 100 C126 100nF PB0-

CRQ R207 68 C129 100nF PR0+
C130 15pF
CRQ_GND R210 100 C133 100nF PR0-

R56 0 C136 4.7nF SOY1

Y1_INB R211 68 C137 100nF Y1+
C138 15pF
Y1_GNDB R213 100 C140 100nF Y1-

CB1_INB R214 68 C141 100nF PB1+
C142 15pF
CB1_GNDB R217 100 C145 100nF PB1-

CR1_INB R218 68 C146 100nF PR1+
C147 15pF
CR1_GNDB R219 100 C148 100nF PR1-

FROM Tuner

SIF R212 8.2K C139 10nF MPX1
C48 1.8pF AADCVSS

AF R215 39K R216 39K CE70 + 47uF/16V MPX2
C143 15pF C144 15pF AADCVSS

KAWA Confidential

Title	AUDIO / VIDEO IN CIRCUIT		
Size C	Document Number AKAI_MT8202_27US_LVDS_V0.0	<Designer> Checked: <Checker>	Rev 1
Date: Thursday, April 13, 2006		Sheet 10 17	

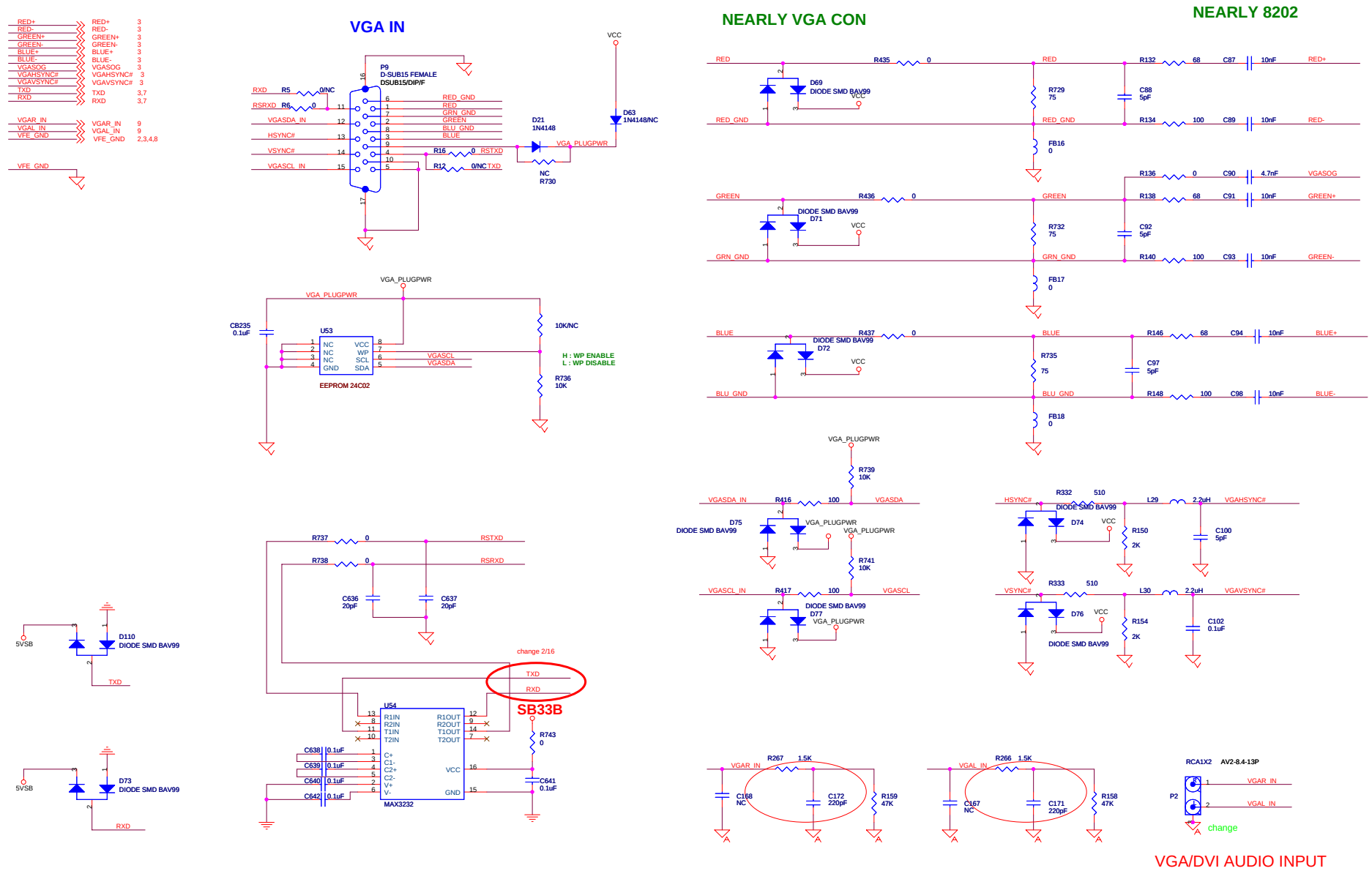

KAWA Confidential

Title	VGA IN & PC AUDIO IN		
Size C	Document Number AKAI_MT8202_27US_LVDS_V0.0	<Designer> Checked: <Checker>	Rev 1
Date: Thursday, April 13, 2006		Sheet 11	17

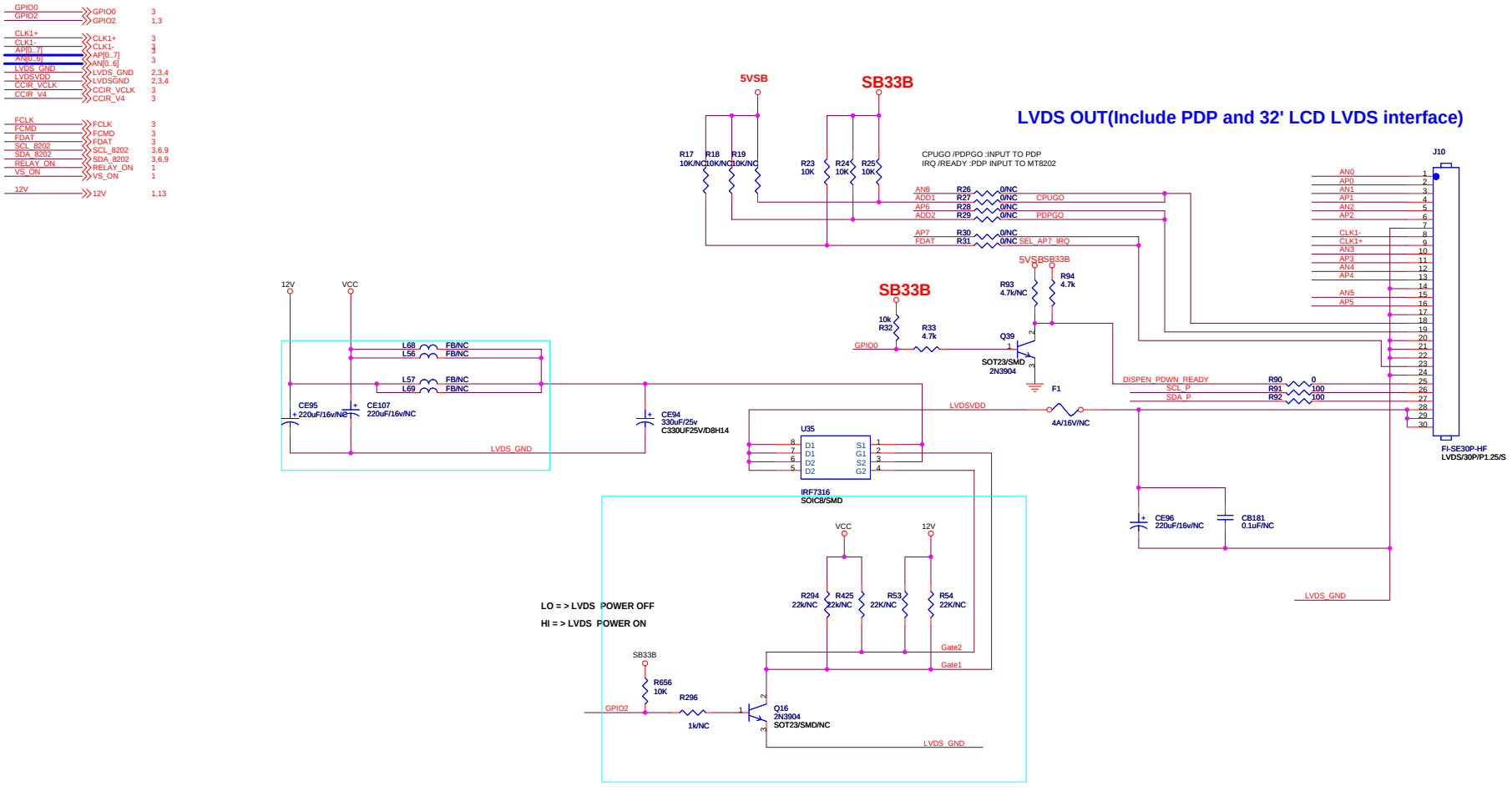

KAWA Confidential

Title: LVDS OUT			
Size: C	Document Number: AKAI_MT8202_27US_LVDS_V0.0	<Designer>	Rev: 1
		Checked: <Checker>	
Date: Thursday, April 13, 2006		Sheet 12 of 17	

IR	IR	3,15
GPIO10	GPIO10	3
GPIO12	GPIO12	3
GPIO13	GPIO13	3
GPIO14	GPIO14	1,3
PWM0	PWM0	3
PWM1	PWM1	3
8202UP3_0	8202UP3_0	3
GPIO14	GPIO14	1,3
GPIO19	GPIO19	1,3
VCLK	VCLK	3
F_A21	F_A21	3
CCIR_V2	CCIR_V2	3
12V	12V	1,12

KEYPAD

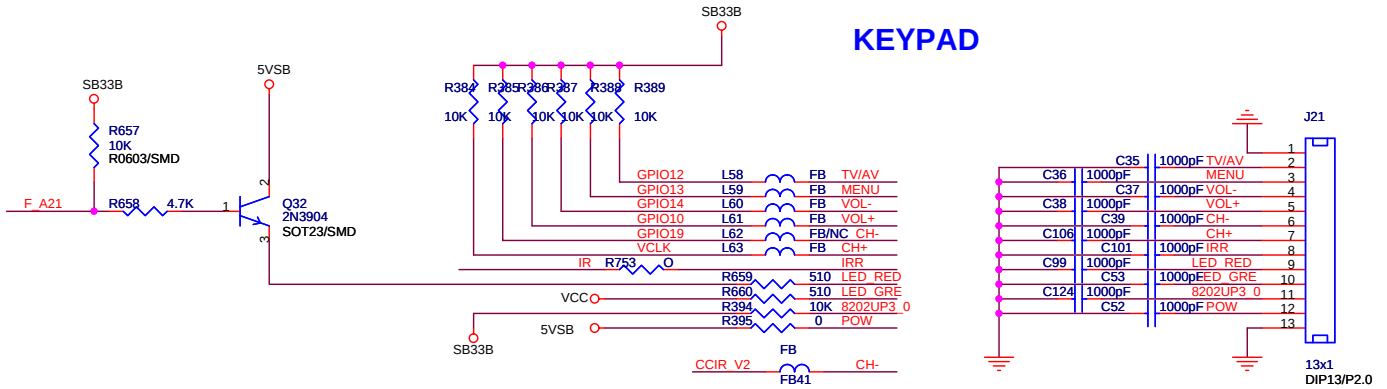

ADC KEY & GPIO KEY KEYPAD

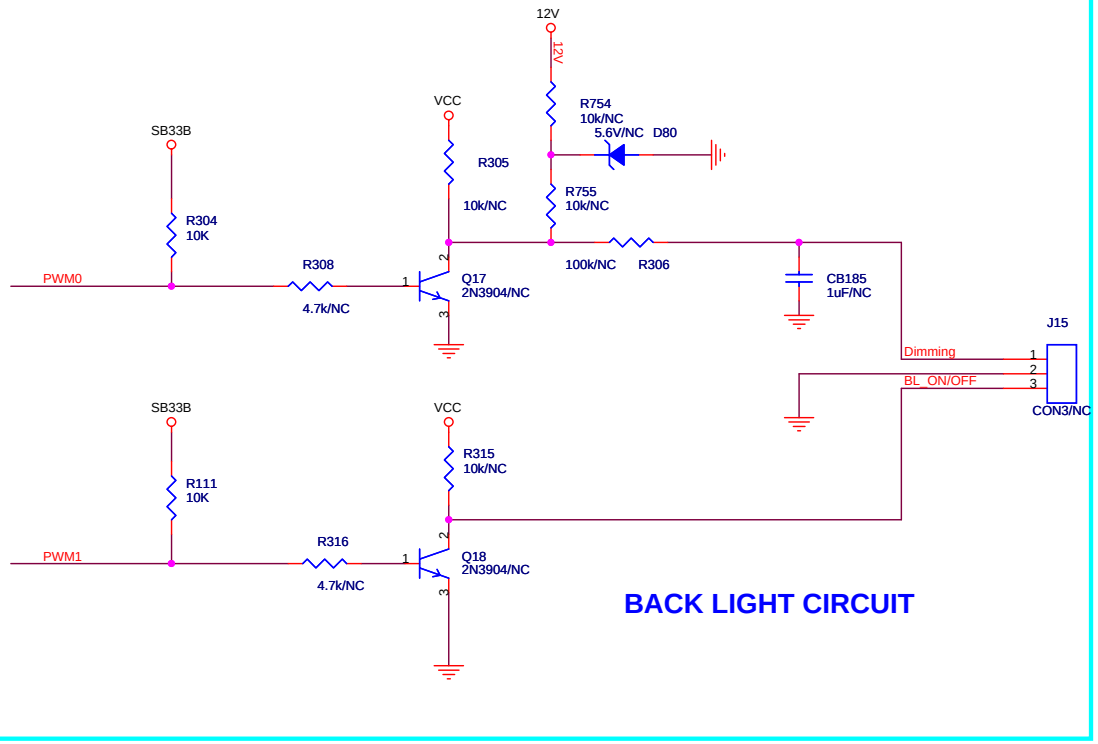

BACK LIGHT CIRCUIT

KAWA Confidential

Title: BACK LIGHT / KEYPAD			
Size: B	Document Number: AKAI_MT8202_27US_LVDS_V0.0	<Designer>	Rev: 1
		Checked: <Checker>	
Date: Thursday, April 13, 2006		Sheet 13 of 17	

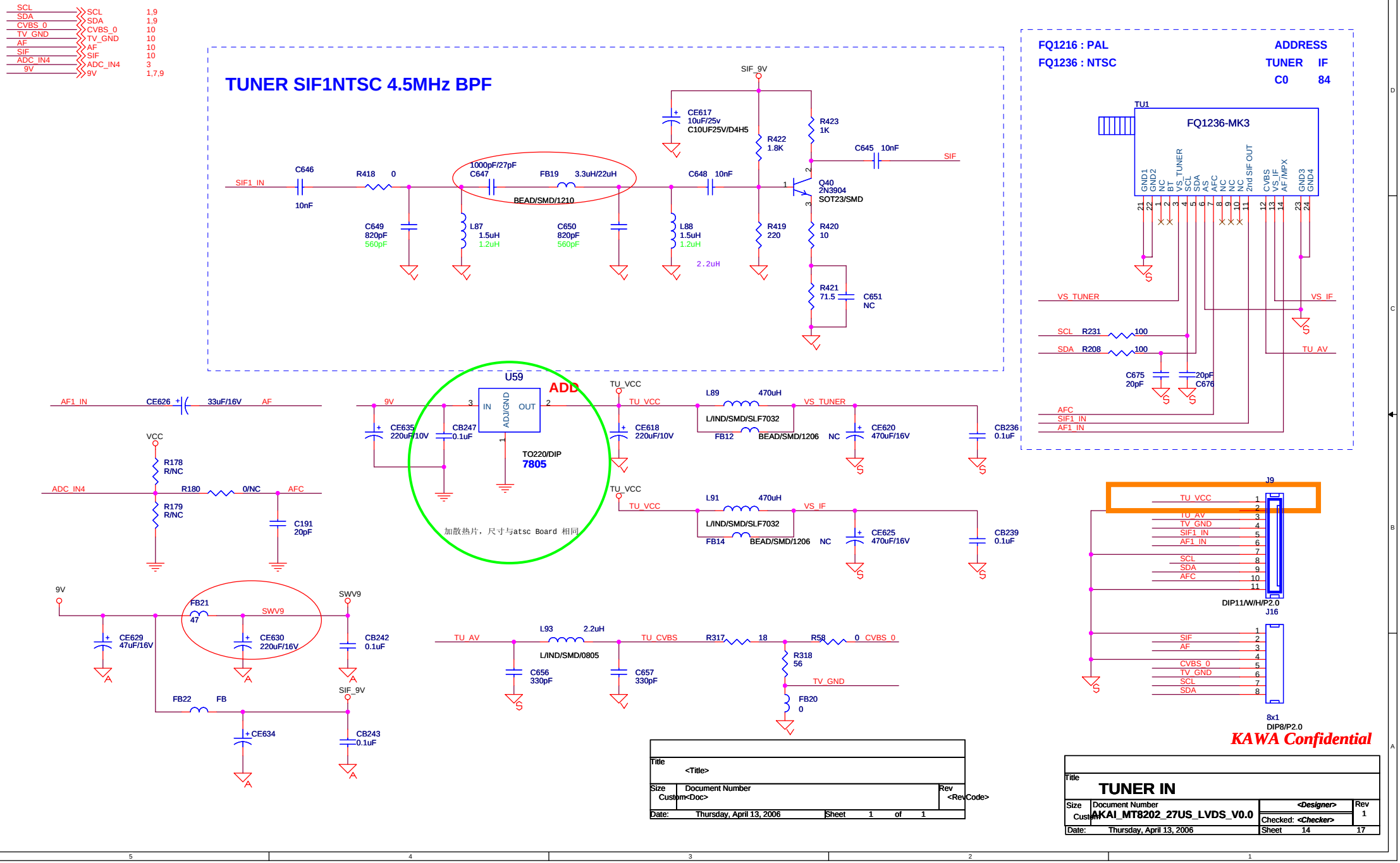
SCL 1,9
SDA 1,9
CVBS_0 10
TV_GND 10
AF 10
SIF 10
ADC_IN4 3
9V 1,7,9
TUNER SIF1NTSC 4.5MHz BPF
SIF_9V
CE617 10uF/25v C10UF25V/D4H5
R423 1K
R422 1.8K
C645 10nF
SIF
SIF1_IN
C646 10nF
R418 0
1000pF/27pF C647
FB19 3.3uH/22uH
BEAD/SMD/1210
C648 10nF
Q40 2N3904 SOT23/SMD
C649 820pF 560pF
L87 1.5uH 1.2uH
C650 820pF 560pF
L88 1.5uH 1.2uH
2.2uH
R419 220
R420 10
R421 71.5
C651 NC
FQ1216 : PAL
FQ1236 : NTSC
ADDRESS
TUNER IF
C0 84
TU1
FQ1236-MK3
GND1 GND2 NC BT VS_TUNER SCL SDA AS AFC NC NC NC 2nd SIF OUT CVBS VS_IF AF/MPX GND3 GND4
VS_TUNER
VS_IF
SCL R231 100
SDA R208 100
TU_AV
C675 20pF
C676 20pF
AFC
SIF1_IN
AF1_IN
AF1_IN CE626 33uF/16V AF
VCC
R178 R/NC
ADC_IN4 R180 0/NC AFC
R179 R/NC
C191 20pF
U59
ADD
9V
IN ADJ/GND OUT
CE635 220uF/10V
CB247 0.1uF
TO220/DIP
7805
加散热片，尺寸与atsc Board 相同
TU_VCC
CE618 220uF/10V
L89 470uH
L/IND/SMD/SLF7032
VS_TUNER
FB12 BEAD/SMD/1206 NC
CE620 470uF/16V
CB236 0.1uF
L91 470uH
VS_IF
FB14 BEAD/SMD/1206 NC
CE625 470uF/16V
CB239 0.1uF
9V
FB21 47
SWV9
CE629 47uF/16V
CE630 220uF/16V
CB242 0.1uF
FB22 FB
SIF_9V
CE634
CB243 0.1uF
TU_AV
L93 2.2uH
L/IND/SMD/0805
TU_CVBS
R317 18
R58 0 CVBS_0
C656 330pF
C657 330pF
R318 56
TV_GND
FB20 0
J9
TU_VCC
TU_AV
TV_GND
SIF1_IN
AF1_IN
SCL
SDA
AFC
DIP11/W/H/P2.0
J16
SIF
AF
CVBS_0
TV_GND
SCL
SDA
8x1
DIP8/P2.0
KAWA Confidential
Title
<Title>
Size Custom
Document Number <Doc>
Rev <RevCode>
Date: Thursday, April 13, 2006
Sheet 1 of 1
Title
TUNER IN
Size Custom
Document Number AKAI_MT8202_27US_LVDS_V0.0
<Designer>
Checked: <Checker>
Rev 1
Date: Thursday, April 13, 2006
Sheet 14 17

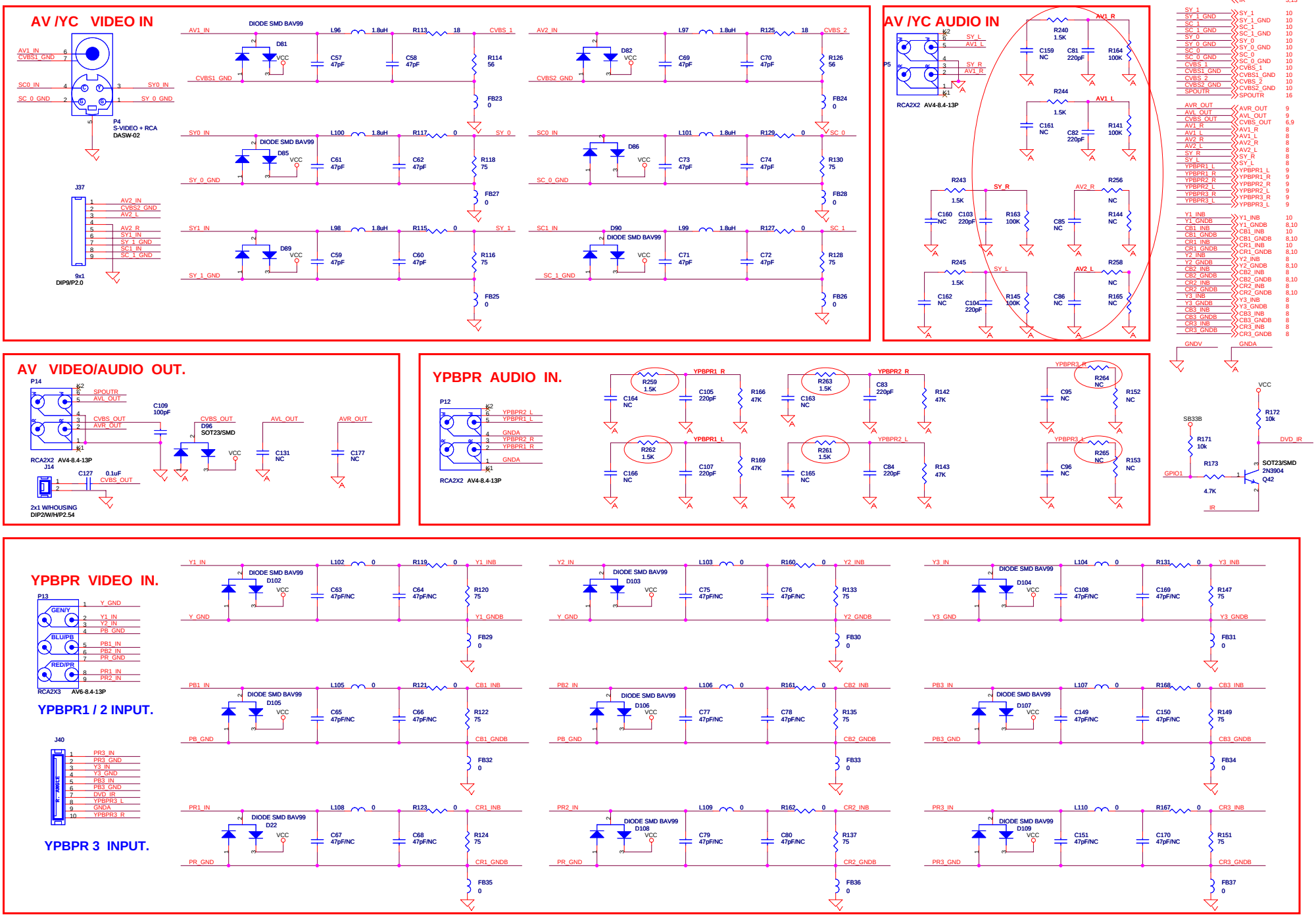

KAWA Confidential

Title	AV IN		
Size C	Document Number AKAI_MT8202_27US_LVDS_V0.0	<Designer>	Rev 1
		Checked: <Checker>	
Date: Thursday, April 13, 2006		Sheet 15	17

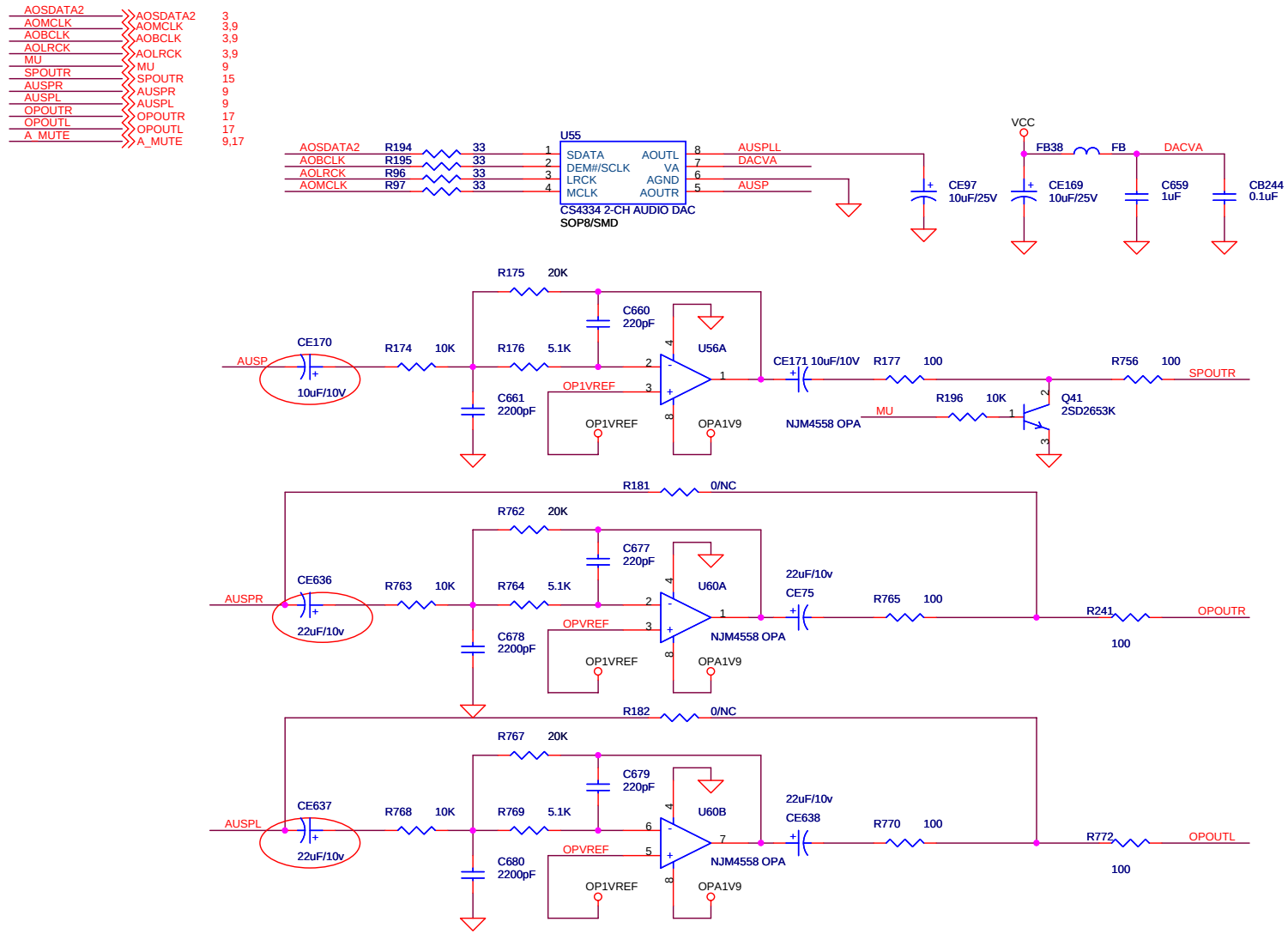

GPIO DECRIPTION

UP3_4 : SW SCL
UP3_5 : SW SDA
ERO0/UP3_0 :KEYPAD POWER
ERO1/UP3_1 : MAIN POWER SWITCH
VCLK : KEPAD CH+
GPIO19 : KEPAD CH-
DE/GPIO : DVD IR
CCIR_CLK : PDP USE
CCIR_V4 : PDP USE
GPIO0 : PDP USE
GPIO1 : NO USE
GPIO2 : LVDS POWER SW
GPIO3 : DTV POWER CONTROL
GPIO4 : EEPROM WRITE PROTECT
GPIO5/TXD : 2nd UART FOR MT5351
GPIO6/RXD : 2nd UART FOR MT5351
GPIO7 : AUDIO BYPASS MUTE CONTROL
GPIO8 : SPEAKER SWITCH
GPIO9 : AUDIO MUTE
GPIO10 : Indicates active video at HDMI port
GPIO11 : DVD POWER CONTROL
GPIO12 : AV SWITCH
GPIO13 : HDMI Hot Plug Detect
GPIO14 : NO USE
GPIO[15..18] : FOR DVD CONTROL
GPIO/PWM0 : DIMMING
GPIO/PWM1 : BACKLIGHT ON/OFF
OUT_27Mhz/GPIO : HDMI CRYSTAL
SDA1 : TO MT5351 I/F REQUEST
SCL1 : TO MT5351 I/F READY
F_A21 : KEYPAD(LED RED)
ADCIN0 : KEYPAD
ADCIN3:PDP 5VD DETECT
ADCIN4:FOR TUNER AFC

CCIR_V[0-3] : KEYPAD
CCIR_V5 : AUDIO SWITCH
CCIR_V6 : RESET DTV
CCIR_V7 : YPBPR VIDEO SWITCH

KAWA Confidential

Title: SUB WOOFER			
Size: B	Document Number: AKAI_MT8202_27US_LVDS_V0.0	<Designer>	Rev: 1
		Checked: <Checker>	
Date: Thursday, April 13, 2006		Sheet 16	17

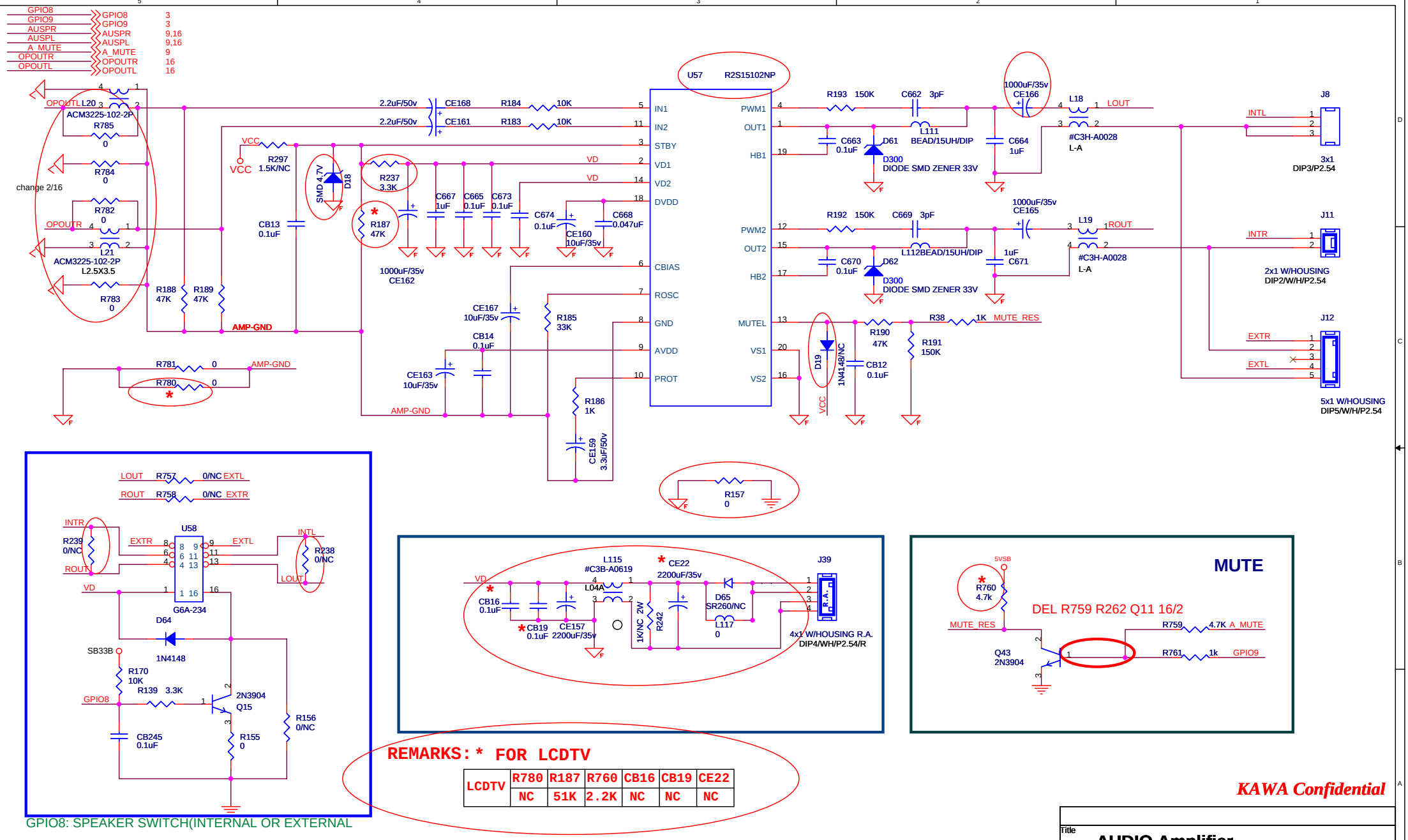

GPIO8: SPEAKER SWITCH(INTERNAL OR EXTERNAL

REMARKS: * FOR LCDTV

LCDTV	R780	R187	R760	CB16	CB19	CE22
	NC	51K	2.2K	NC	NC	NC

KAWA Confidential

Title: AUDIO Amplifier			
Size: B	Document Number: AKAI_MT8202_27US_LVDS_V0.0	<Designer>	Rev: 1
		Checked: <Checker>	
Date: Saturday, April 22, 2006		Sheet 17	17

MT5111 / MT5351 REFERENCE DESIGN - 4 LAYERS

Rev	History	P#	DATE
RA-V1	INITIAL VERSION		2005/06/15
RA-V2	ADDED AUDIO SWITCH / REFINE POWER CIRCUIT		2005/07/14

01. INDEX AND INTERFACE
02. POWER
03. TUNER
04. MT5111 ASIC
05. MT5351 ASIC
06. MT5351 PERIPHERAL
07. DDR MEMORY
08. NOR FLASH / JTAG / UART

NS : NON-STUFF

NAME	TYPE	DEVICE
+12V	POWER +12V	POWER SUPPLY
+5V	POWER +5V	POWER SUPPLY
+5V_tuner	POWER +5V	TUNER POWER
DV33_DM	POWER +3V3	MT5111 POWER
DV18	POWER +1V8	MT5111 POWER
DV33	POWER +3V3	MT5351 POWER
AV33	POWER +3V3	MT5351 ANALOG POWER
DV25	POWER +2V5	MT5351 DDR POWER
DV12	POWER +1V2	MT5351 POWER
GND	GROUND	GROUND

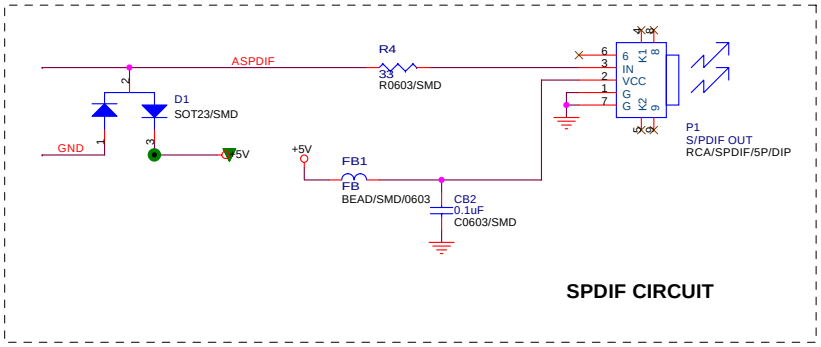

SPDIF CIRCUIT

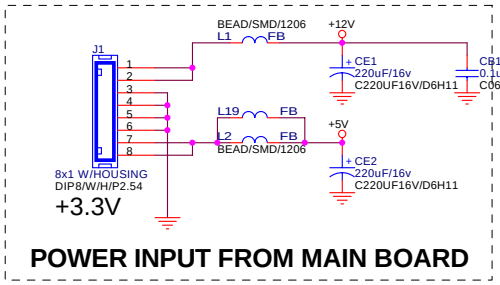

POWER INPUT FROM MAIN BOARD

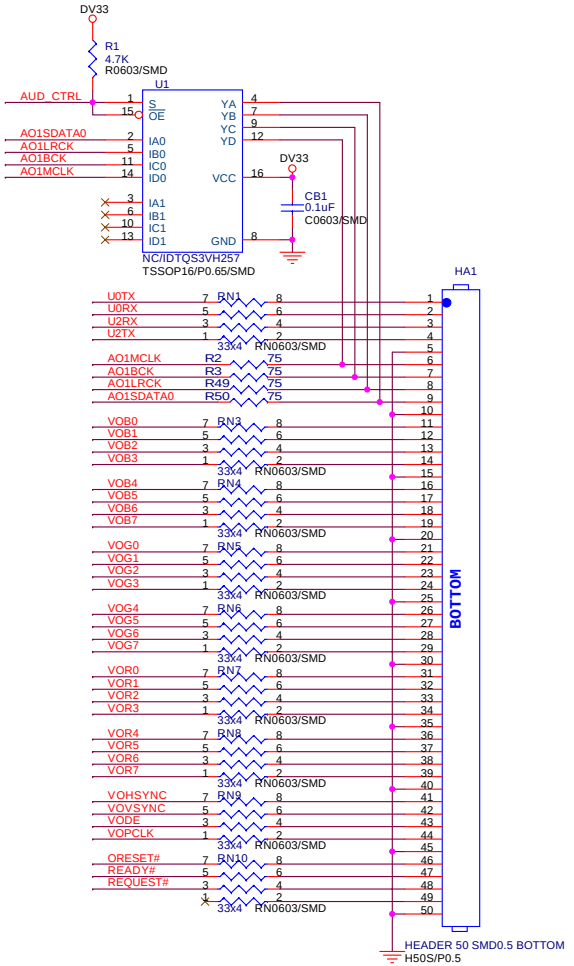

DIGITAL OUTPUT

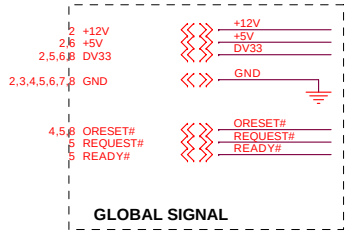

GLOBAL SIGNAL

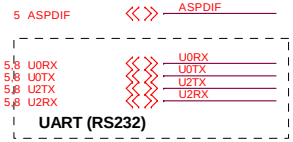

UART (RS232)

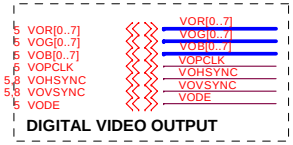

DIGITAL VIDEO OUTPUT

DIGITAL AUDIO INTERFACE

MediaTek Confidential

Title: INDEX
Size: Custom | Document Number: MT5351RA-V2 | Rev: 1
Date: Monday, February 20, 2006 | Sheet 1 of 8
TwinSon Chan

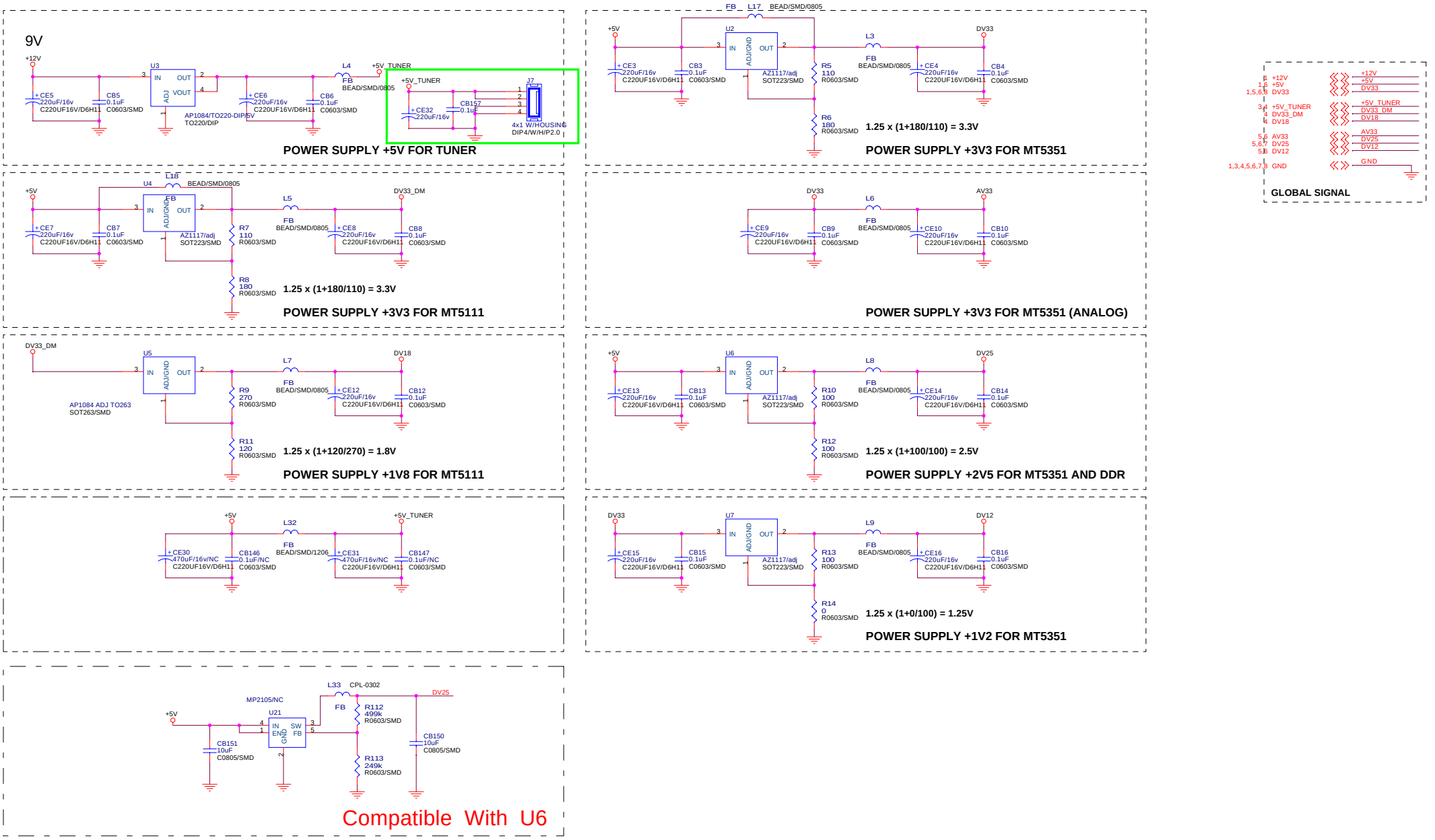

MediaTek Confidential

Title: POWER			
Size: Custom	Document Number: MT5351RA-V2	TwinSon Chan	Rev: 1
Date: Monday, February 20, 2006	Sheet 2 of 8		

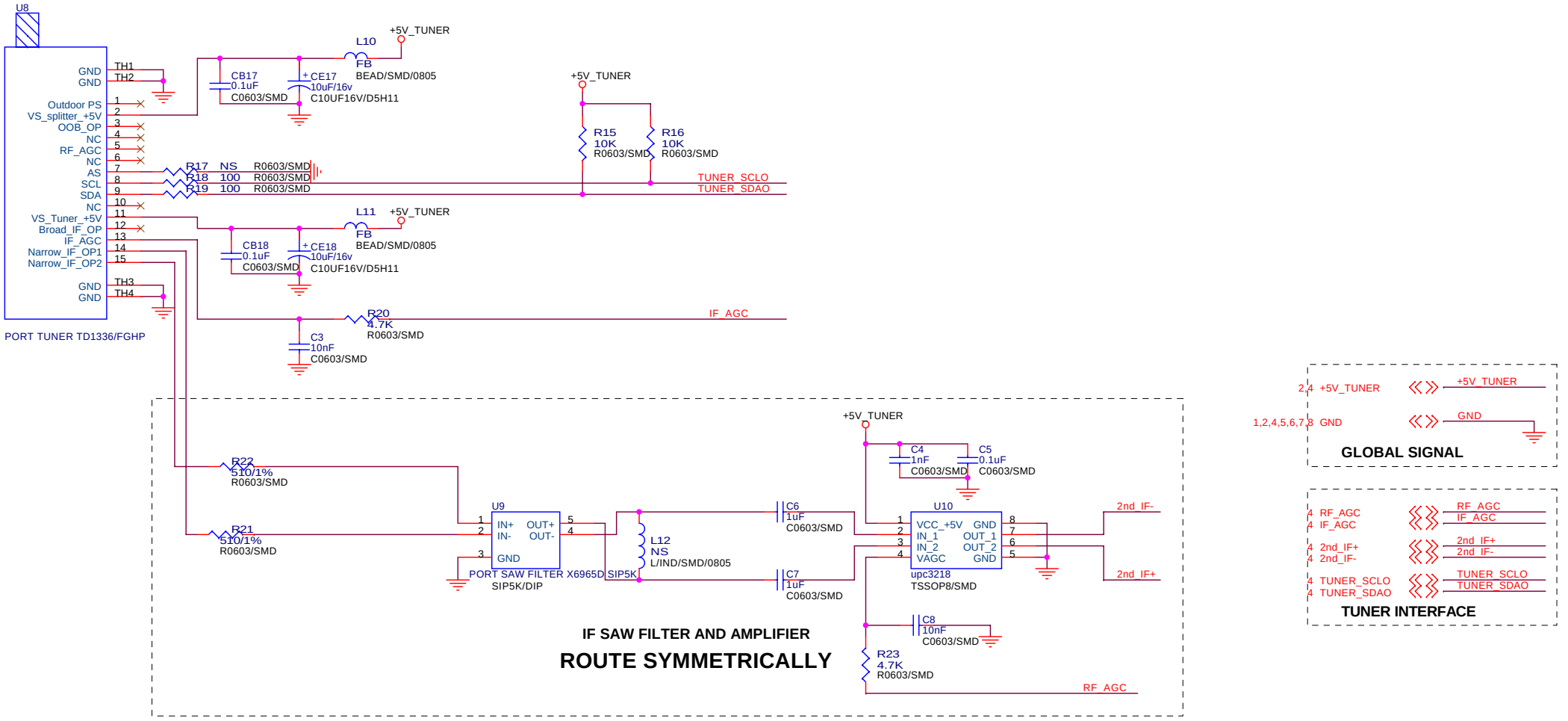

MediaTek Confidential

Title: TUNER			
Size: Custom	Document Number: MT5351RA-V2	TwinSon Chan	Rev: 1
Date: Monday, February 20, 2006		Sheet 3 of 8	

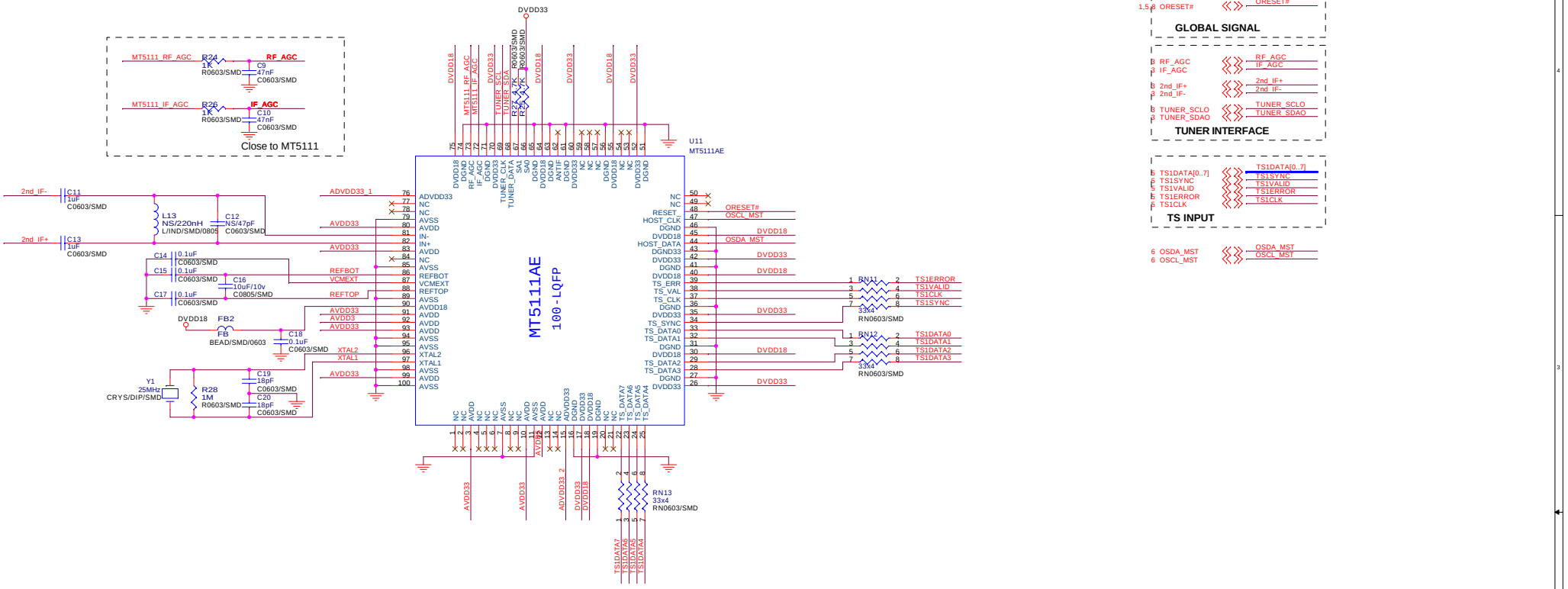

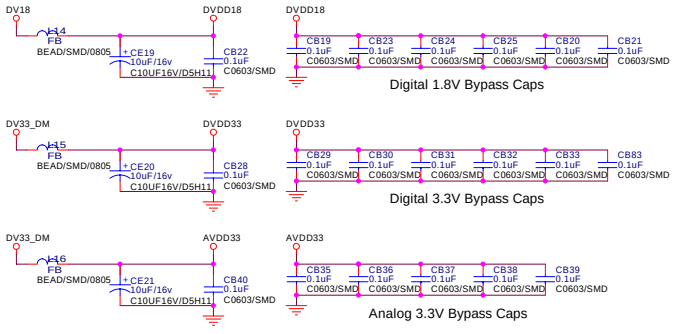

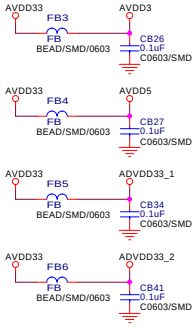

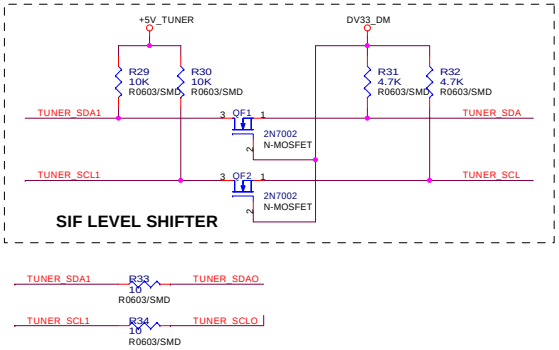

MediaTek Confidential

Title: MT5111 ASIC			
Size: C	Document Number: MT5351RA-V2	TwinSon Chan	Rev: 1
Date: Monday, February 20, 2006		Sheet 4 of 8	

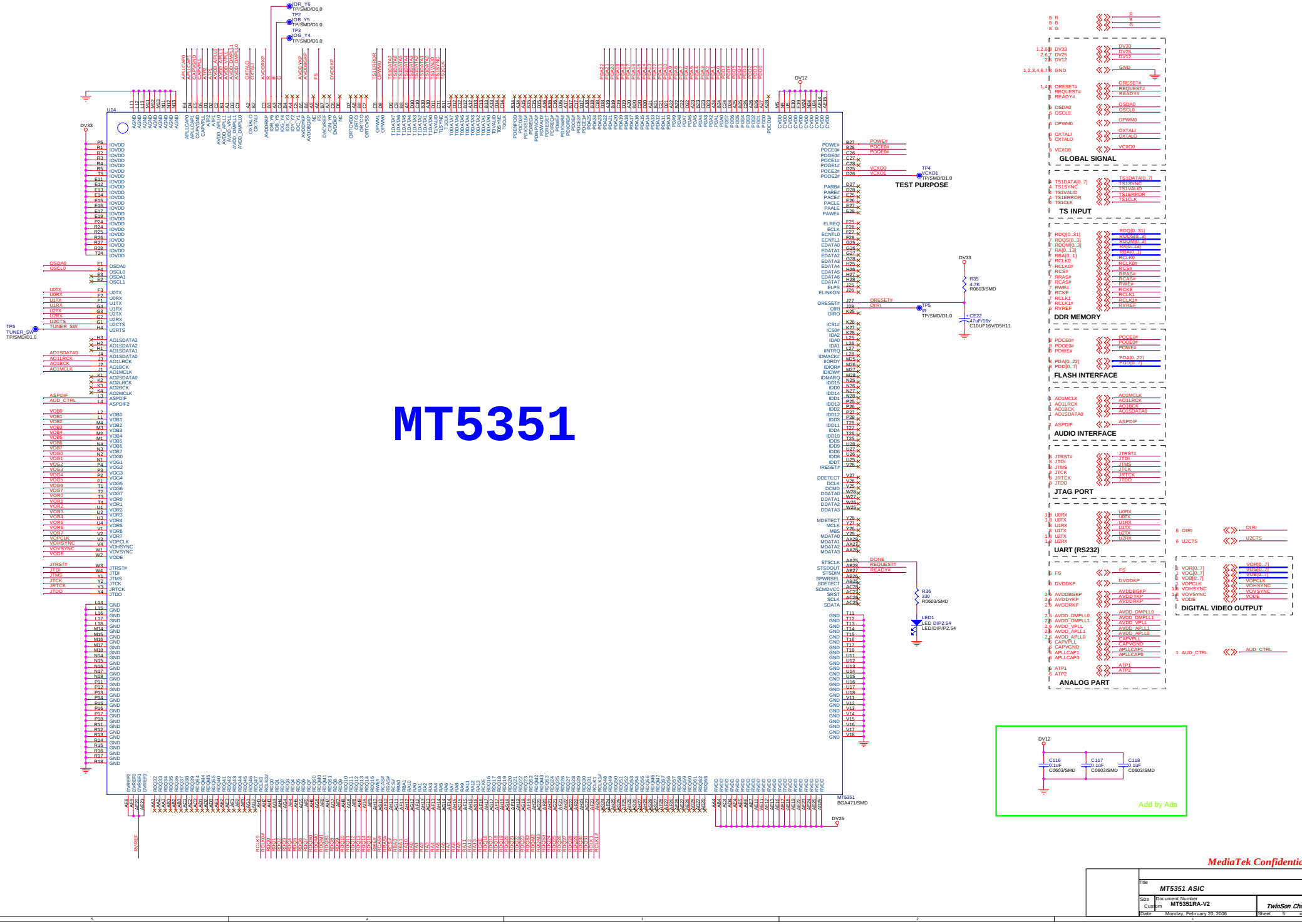

MediaTek Confidential

Title: MT5351 ASIC			
Size: Custom	Document Number: MT5351RA-V2	TwinSon Chan	Rev: 1
Date: Monday, February 20, 2006	Sheet 5 of 8		

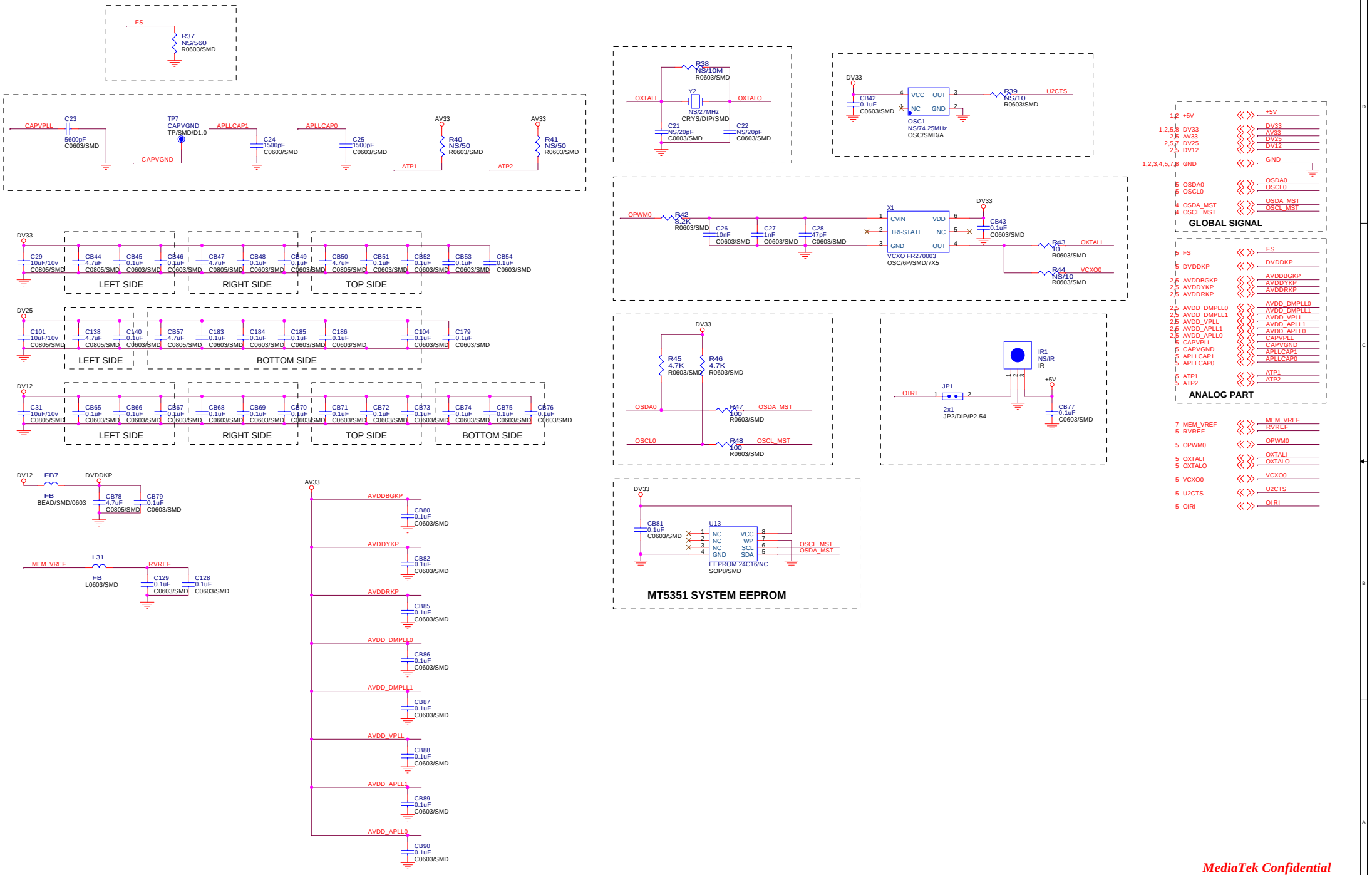

MediaTek Confidential

Title: MT5351 PERIPHERAL			
Size: Custom	Document Number: MT5351RA-V2	TwinSon Chan	Rev: 1
Date: Monday, February 20, 2006		Sheet 6 of 8	

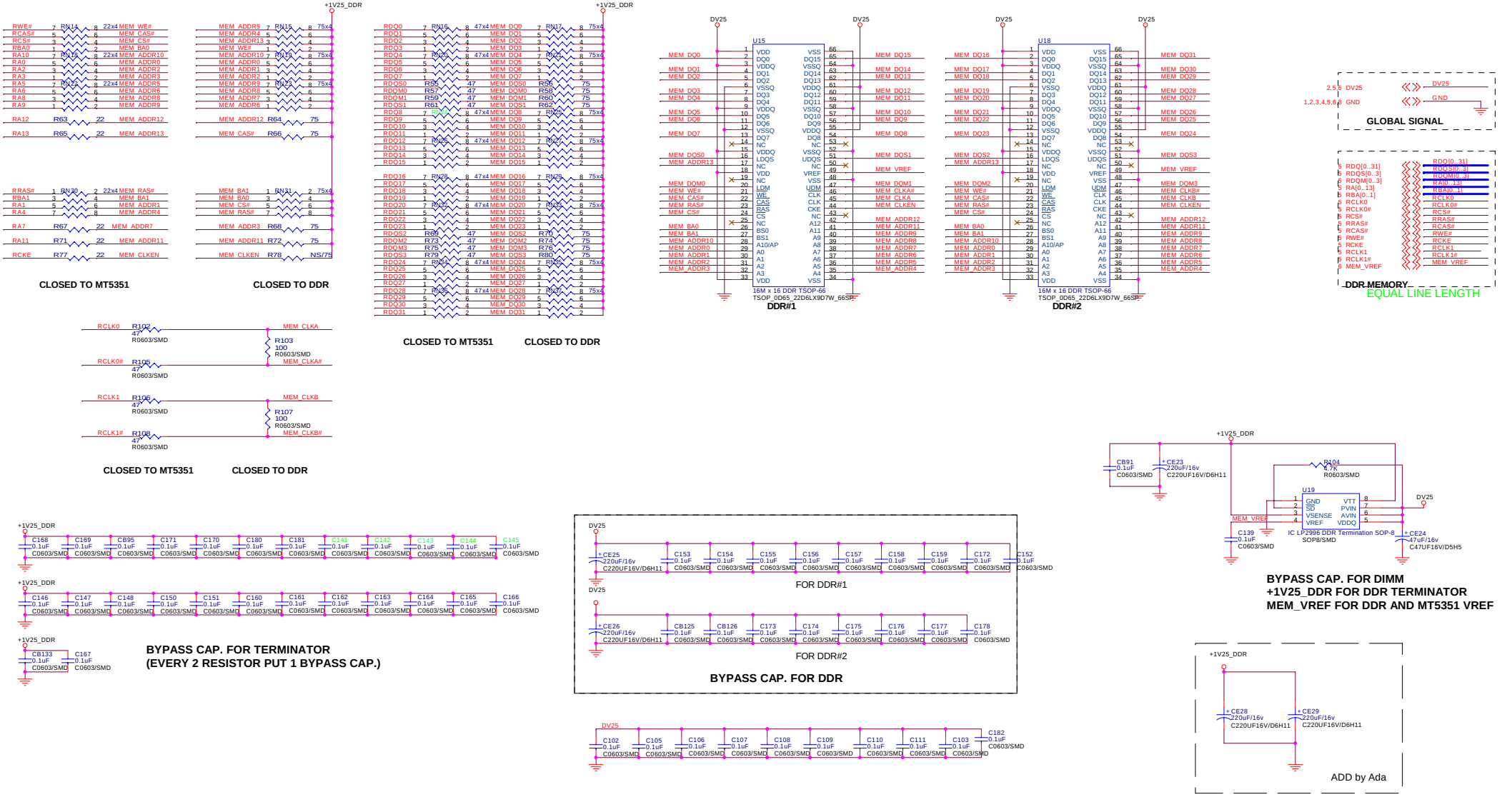

MediaTek Confidential

Title: DDR MEMORY			
Size: Custom	Document Number: MT5351RA-V2	TwinSon Chan	Rev: 1
Date: Monday, February 20, 2006		Sheet 7 of 8	

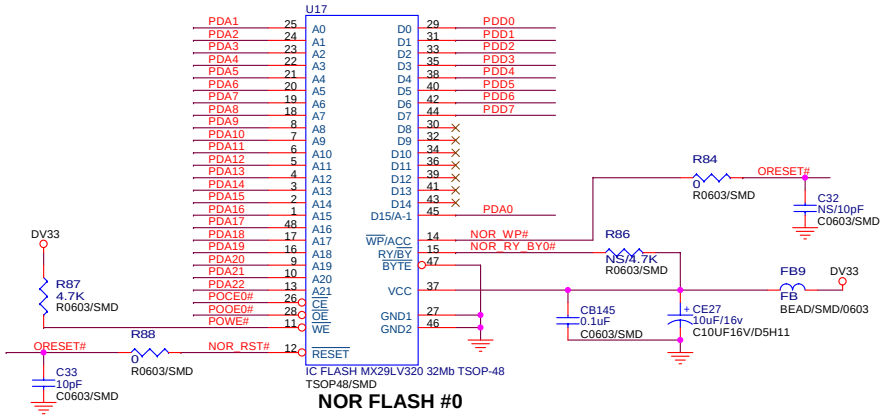

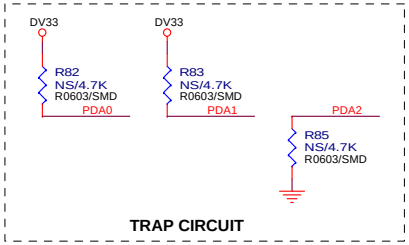

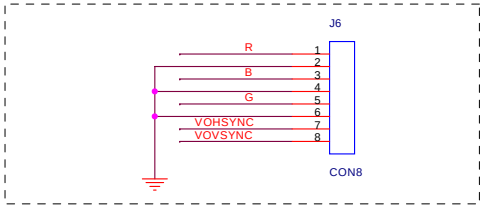

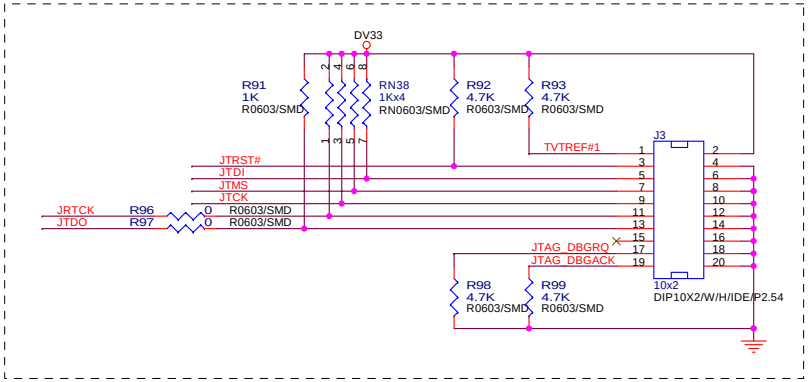

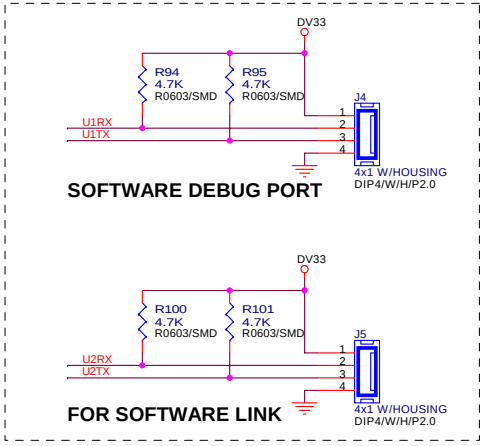

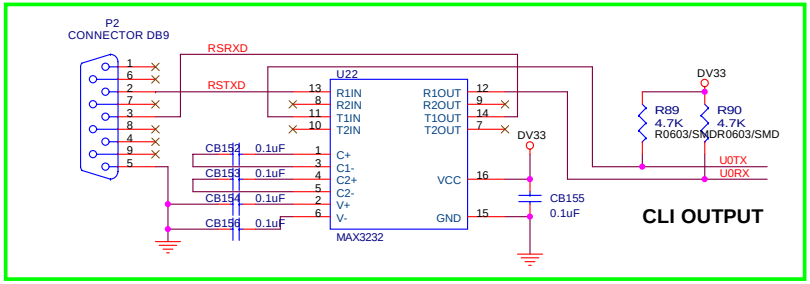

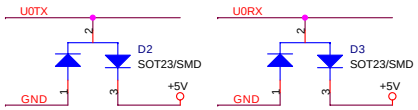

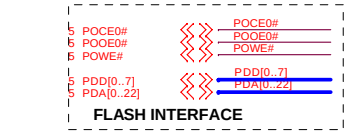

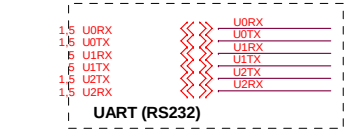

MediaTek Confidential

Title	NOR FLASH / JTAG / UART	
Size: Custom	Document Number: MT5351RA-V2	Rev: 1
Date: Monday, February 20, 2006	TwinSon Chan	Sheet 8 of 8

Main IC Specifications

- M13S128168A (ESMT)
  2M x 16 Bit x 4 Banks Double Data Rate SDRAW

- MT5111CE
  Single-Chip HDTV/CATV Demodulator

- MT5351
  MT5351 is a DTV Backend Decoder SOC which support flexible transport demux, HD MPEG-2 video decoder, MPEG1,2, MP3, AC3 audio decoder, HDTV encoder. MT5351 is powered by ARM 926EJ with 16K I-Cache and 16K D-Cache. It can support 64Mb to 1Gb DDR DRAM devices with configurable 32/64 bit data bus interface.

- MT8202
  MT8202G is a highly integrated Single-Chip for LCD TV supporting video input and output format up to HDTV. It includes 3D comb filter TV decoder to retrieve the best image from popular composite signals.

- MT8293
  HDMI PanelLink Cinema Receiver

- R2S15102NP
  Digital Power Amplifier R2S15102NP

- WM8776
  24-bit, 192kHz Stereo CODEC with 5 Channel I/P Multiplexer

To :
Date : 2005.10.13

CPT TFT-LCD

CLAA320WA01 C

ACCEPTED BY：

TENTATIVE

APPROVED BY	CHECKED BY	PREPARED BY
		TFT-LCD Product Planning Management General Division

RECORD OF REVISIONS

Revision No.	Date	Page	Description
Ver1.0	2005/8/29	all	Preliminary specification was first issued.
Ver2.0	2005/9/28	3	Module Weight = 8000(Max)→8200(Max)
		4	Input Voltage of Inverter =21.6 (Min)→ -0.3(Min) Input Voltage of Inverter =26.4 (Max)→27 (Max) Inverter Dimming=0 (Min)→ -0.3(Min) Inverter Dimming=5(Max)→5.5(Max) Backlight on Control Voltage=2(Min)→ -0.3(Min) Backlight on Control Voltage=5(Max)→5.5(Max)
		5	LCD Power Supply Current—White=400(Typ.)→350(Typ.) LCD Power Supply Current—White= -- (Max)→400(Max) LCD Power Supply Current—Black=350(Typ.)→300(Typ.) LCD Power Supply Current—Black= --(Max)→400(Max) LCD Power Supply Current—RGB stripe=390(Typ.)→320(Typ.) LCD Power Supply Current—RGB stripe= --(Max)→400(Max)
		8	Input Frequency of Inverter=60.5(Min)→61.5(Min) Input Frequency of Inverter=66.5(Max)→65.5(Max)
		10	Pin 25=NC→DE/Sync
		13	DCLK Freq.=68(Min)→62(Min) Horizontal Line Rate=43.2(Min)→37.1(Min) Horizontal Line Rate=48.5(Typ.)→48.6(Typ.) Horizontal Line Rate=53.3(Max)→56Max) Horizontal Effective Time= --(Min)→1366(Min) Horizontal Effective Time= --(Max)→1366(Max) Vertical Frame Rate=54.6(Min)→47(Min) Vertical Frame Rate=67.5(Max)→63(Max)
		22	Response Time Tr= 9(Typ.)→10(Typ.) Response Time Tr=16(Max)→17(Max) Response Time Tf= 7(Typ.)→6(Typ.) Response Time Tf=9(Max)→8(Max)
	2005/10/13	3	Module Weight = 8200(Max)→8300(Max)
		8	Power Consumption=(115, Typ)→(120, Typ)

CONTENTS

No	Item	Page
1	OVERVIEW	3
2	ABSOLUTE MAXIMUM RATINGS	4
3	ELECTRICAL CHARACTERISTICS	5
4	INTERFACE PIN CONNECTION	10
5	INTERFACE TIMING	13
6	BLOCK DIAGRAM	18
7	MECHANICAL SPECIFICATION	19
8	OPTICAL CHARACTERISTICS	21
9	RELIABILITY TEST CONDITIONS	26
10	PACKAGING	27
11	HANDLING PRECAUTIONS FOR TFT-LCD MODULE	30

1. OVERVIEW

CLAA320WA01 is 32” color (80.04cm) TFT-LCD (Thin Film Transistor Liquid Crystal Display) module composed of LCD panel, LVDS driver ICs, control circuit, backlight, and inverter. By applying 8 bit digital data, 1366*768, 16.7 million-color images are displayed on the 32” diagonal screen. General specification are summarized in the following table:

1.1 GENERAL INFORMATION

ITEM		SPECIFICATION
Display Area (mm)		697.68 (H) × 392.25 (V) (31.51 inch diagonal)
Number of Pixels		1366 (H) × 768 (V) 16:9
Pixel Pitch (mm)		0.51075 (H) × 0.51075 (V)
Color Pixel Arrangement		RGB Vertical Strip
Display Mode		Normally Black
Number of Colors		16.7M (8bit)
Surface Treatment		Hard coating: 2H Anti-Clare + LR <less than 2% reflection.
Wide view tech.		MVA
Viewing Angle	CR≧10	-85~85(H), --85~85(V)
Brightness (cd/m2)		550 (Typ.)
Total Module Power (W)		125
Module Size (mm)		743.0±1(W) × 447.0±1 (H) × 44.0±1 (D) (including inverter)
Module Weight (g)		**8300 (Max)**

1.2 MECHANICAL INFORMATION

ITEM			MIN	TYP.	MAX.	UNIT
Module outline dimension	Horizontal (H)		742.0	743.0	744.0	mm
	Vertical (V)		446.0	447.0	448.0	mm
	Depth (D)	with inverter	43.0	44.0	45.0	mm
Module Weight			--	--	**8300**	g

2. ABSOLUTE MAXIMUM RATINGS

The following are maximun values which, if exceeded, may cause faulty operation or damage to the module.

ITEM	SYMBOL	MIN.	MAX.	UNIT	REMARK
Power Supply Voltage For LCD	VCC	- 0.3	15.0	V	
Input voltage of inverter	VBL	- 0.3	27	V	
Inverter dimming	VDIM	- 0.3	5.5	Vdc	
Backlight on control voltage	V_{BLON}	- 0.3	5.5	Vdc	
ESD	VESDt	-100	100	V	
	VESDc	-8000	8000	V	
Operation Ambient Temperature	T_{op}	0	50	℃	*1) *2) *3) *4)
Storage Temperature	T_{stg}	-20	60	℃	*1) *2) *3) *4)

[Note]

*1) The relative temperature and humidity range are as below sketch.(90%RHMax / Ta≦40℃)

*2) The maximum wet bulb temperature ≦39℃ (Ta＞40℃) and without dewing.

*3) If you use the product in a environment which over the definition of temperature and humidity too long, and it will effect the result of visible inspection.

*4) While the product operates in normal temperature range, the center surface of panel should be under 60℃.

*5) Input voltage of the connector side in Inverter.

Humidity:

Humidity≦85%RH without condensation.

Relative Humidity ≦90% (Ta≦ 40℃)

Wet Bulb Temperature ≦39℃ (Ta≧40℃)

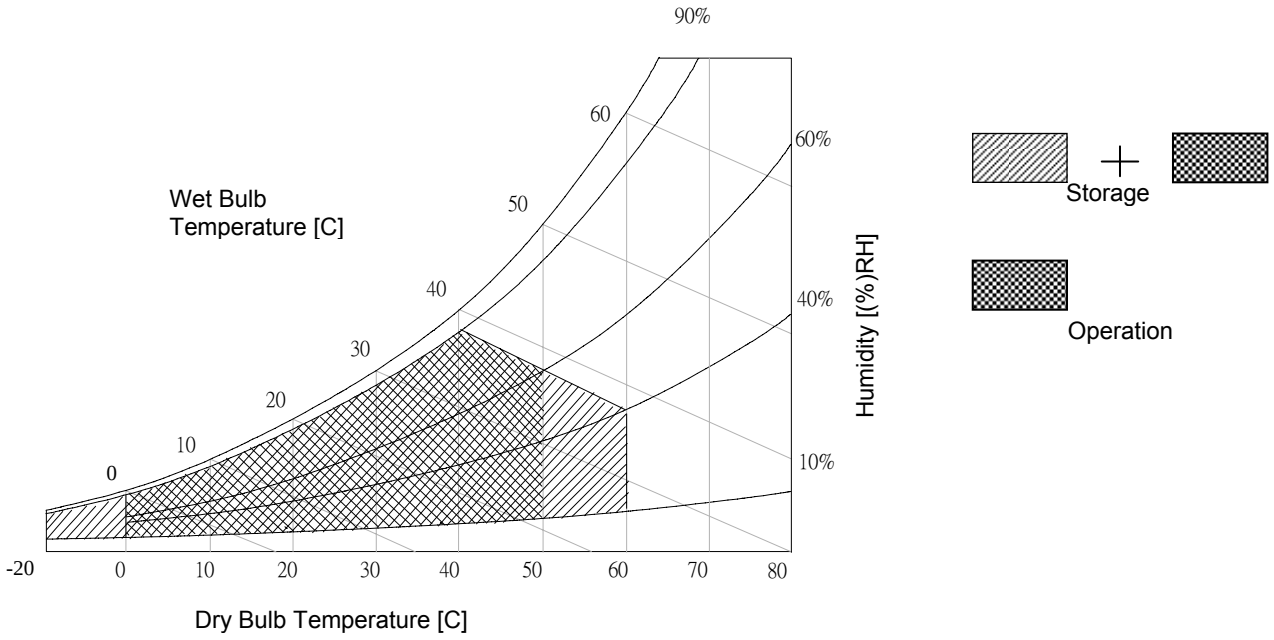

3. ELECTRICAL CHARACTERISTICS

3.1 TFT-LCD MODULE

Ta=25℃

ITEM		SYMBOL	MIN	TYP	MAX	UNIT	REMARK
LCD Power Supply Voltage		VCC	11.4	12.0	12.6	V	*1)
Ripple Voltage		Vrpd	--	--	100	mVp-p	VIN=+12.0V
Rush current		Irush	--	--	8	A	*2)
LCD Power Supply Current	White	ICC	--	350	400	mA	*3)
	Black		--	300	400		
	RGB stripe		--	320	400		
LCD power consumption		Pc	--	6.48	9.7	W	
High input voltage of LVDS		V_{IN+}	--	--	100	mV	*4) *5)
Low input voltage of LVDS		V_{IN-}	100	--	--	mV	
Input common voltage of LVDS		VCM	--	1.25	-	V	
Input terminal resist of LVDS		R_T	--	100	--	ohm	

[Note]

*1) The module should be always operated within above ranges.

*2) Measure conditions:

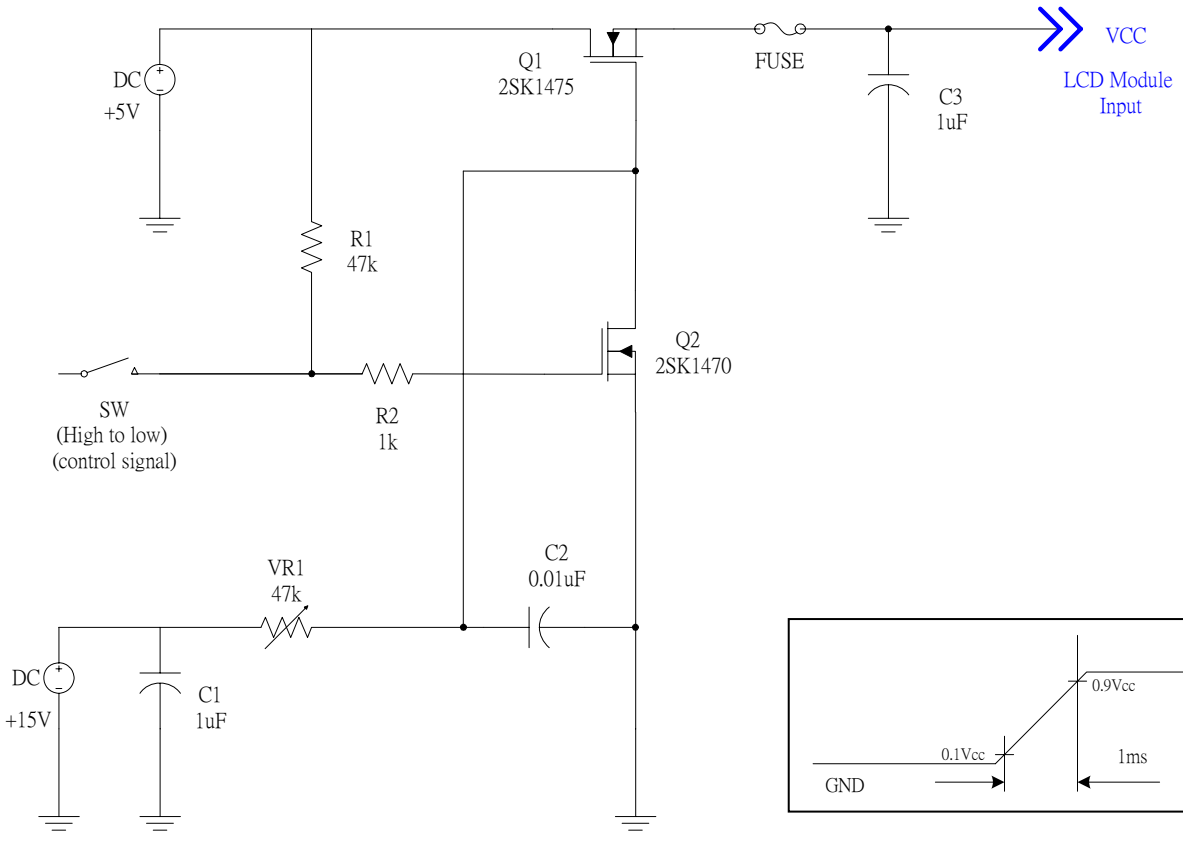

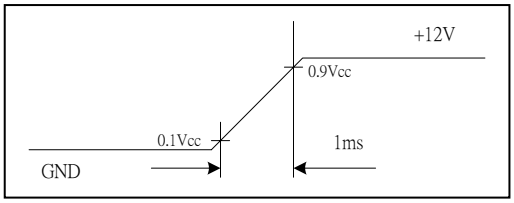

Vcc rising time is 1 ms

*3) The specified power supply current is under condition at Vcc=12V, Ta=25+/-2℃, f_v=60Hz, whereas a power dissipation check pattern below is displayed.

a. White pattern

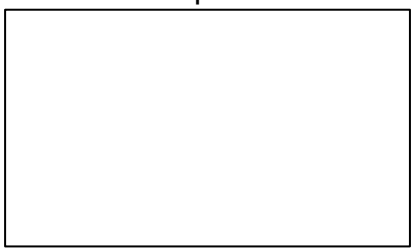

b. Black pattern

c. RGB Stripe pattern

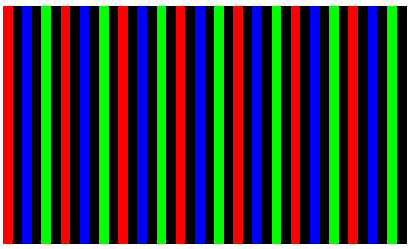

*4) Power and Signal Sequence:

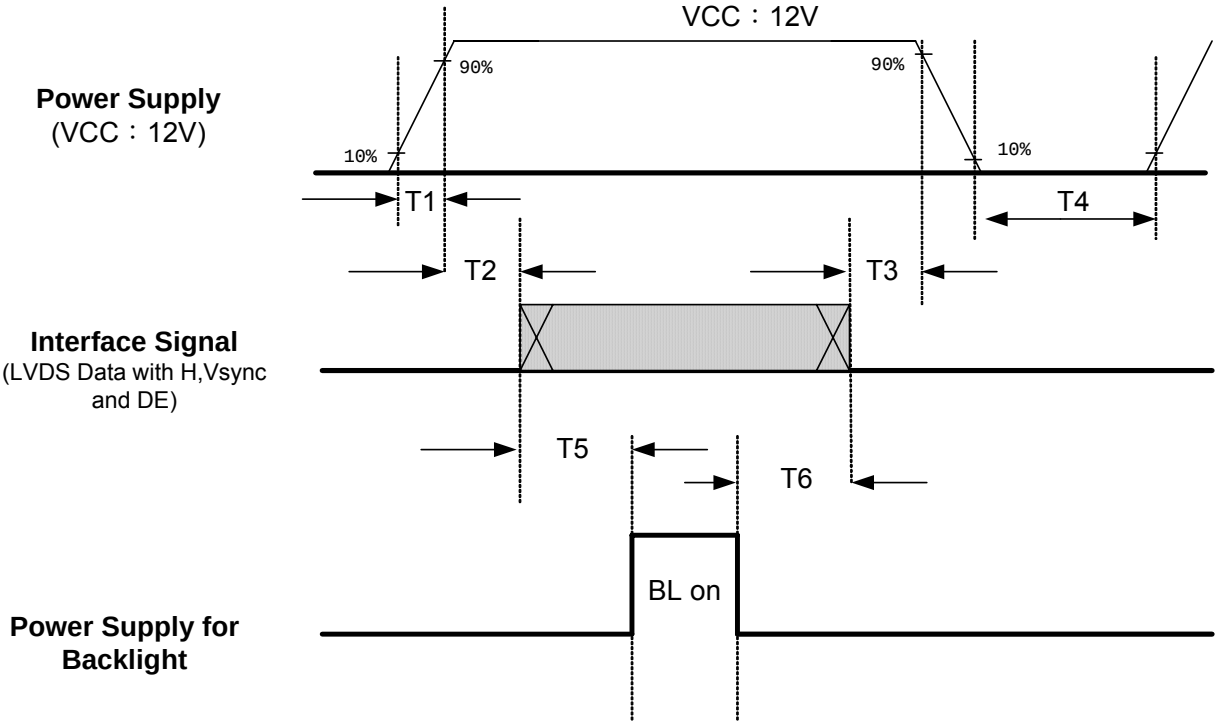

Power Sequence Table

Parameter	Value			Unit
	Min	Typ	Max	
T1	1	---	30	ms
T2	0	---	50	ms
T3	0	---	50	ms
T4	2000	---		ms
T5	110	---		ms
T6	100	---		ms

Notes:

- Please avoid floating state of interface signal at invalid period.
- When the interface signal is invalid, be sure to pull down the power supply for LCD to 0V.
- Lamp power must be turn off after power supply for LCD interface signal valid.

VCC-dip State:

1) When 9V≦VCC＜11.4 V, td≦10 ms.
2) VCC ＞ 11.4V, VCC-dip condition should also follow the VCC-turn-off condition.

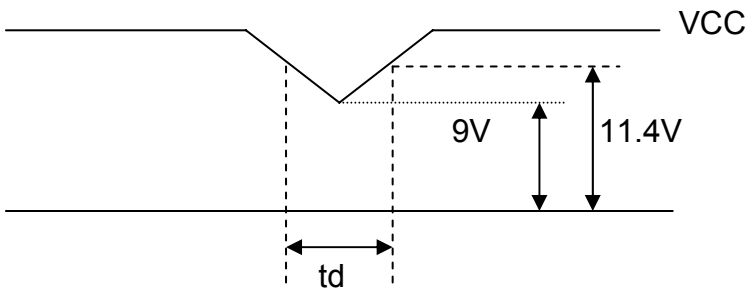

*5) LVDS Signal Definition:

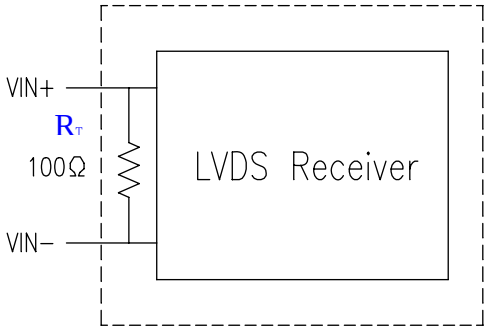

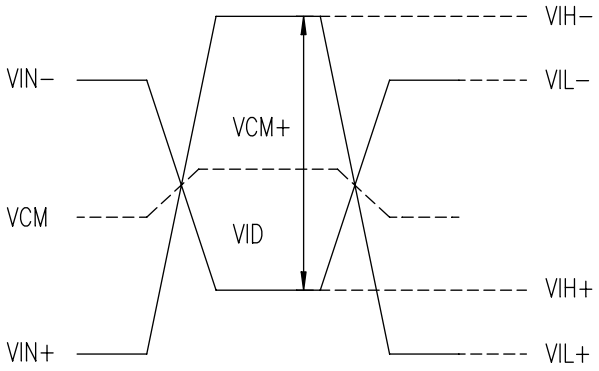

VID = VIN_+ – VIN-,

△VCM = ｜VCM_+–VCM-｜,

△VID = ｜VID_+–VID-｜,

VID+ = ｜VIH_+–VIH-｜,

VID- = ｜VIL_+–VIL-｜,

VCM = (VIN_++VIN-) / 2,

VCM+ = (VIH_++VIH-) / 2,

VCM- =(VIL_++VIL-) / 2,

VIN+: Positive Polarity differential DATA & CLK input

VIN-: Negative Polarity differential DATA & CLK input

3.2 BACKLIGHT

Ta=25℃

ITEM		SYMBOL	MIN	TYP	MAX	UNIT	REMARK
Lamp Voltage		VL	--	1150	--	Vrms	IL=5.0mA
Lamp Current		IL	4.0	4.5	5.0	mArms	*1)
Lamp life time		LT	50,000	--	--	hr	*2)
Input voltage of inverter		VBL	21.6	24	26.4	V	*3)
Input current of inverter		IIN0	--	(4.8)	--	A	*4)
		IIN		(4.4)			*5)
Input frequency of inverter		FL	61.5	63.5	65.5	KHz	*6)
Inverter dimming		VDIM	0	--	5	Vdc	*7)
Inverter duty ratio		--	20	--	100	%	VDIM=5V(MAX.)
Inverter opening voltage		Vopen	1900	--	--	Vrms	
Backlight on /of control voltage	ON	V_{BLON}	2.0	--	5	V	
	OFF		0	--	0.8		
Power consumption (Panel+ Backlight)		BLW0	--	**(120)**	--	W	*4)
		BLW	--	(105)	--		*5)

[Note]

*1) Lamp Current measurement method (The current meter is connected to low voltage end)
Take the average of 16 CCFL's lamp current as V_{DIM} = 5V after power on for 30 min.

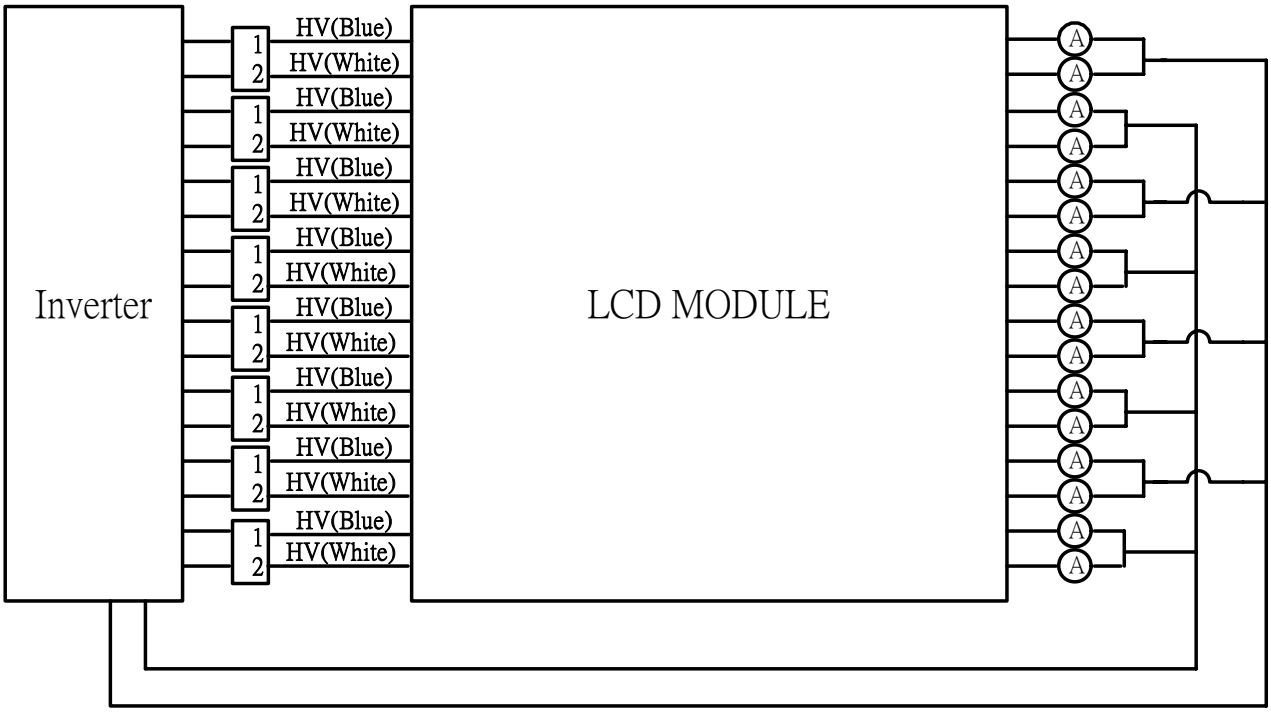

*2) Definition of the lamp life time:
When lamp luminance redue to 50% or lower than its initial value.

*3) Ripple voltage that occur at the instant of power-on can't exceed 30V.

*4) 25°C; V_{DIM} = 5V(MAX.), After power on for 5 seconds

*5) 25°C; V_{DIM} = 5V(MAX.), After power on for 30 minutes

*6) Electrical and optical characterisitics color chromaticity is not included can maintain in a range +/- 10% when the inverter operates within this frequency range.

*7) Brightness is the darkest when V_{DIM} = 0V;
Brightness is the brightest when V_{DIM} = 5V.

4. INTERFACE PIN CONNECTION

4.1 Connector Part No.: 20389-030E(I-PEX), FI-X30SSL-HF(JAE), or compatible

Pin NO	Symbol	Description	Note
1	VCC	Power supply: +12V	
2	VCC	Power supply: +12V	
3	GND	Ground	
4	GND	Ground	
5	RxIN0-	Data-	
6	RxIN0+	Data+	
7	GND	Ground	
8	RxIN1-	Data-	
9	RxIN1+	Data+	
10	GND	Ground	
11	RxIN2-	Data-	
12	RxIN2+	Data+	
13	GND	Ground	
14	RxCLKIN-	Clock-	
15	RxCLKIN+	Clock+	
16	GND	Ground	
17	RxIN3-	Data-	
18	RxIN3+	Data+	
19	GND	Ground	
20	NC	Reserved	*1)
21	NC	Reserved	*1)
22	NC	Reserved	*1)
23	NC	Reserved	*1)
24	NC	Reserved	*1)
25	DE/Sync	DE/Sync Option	*3)
26	NC	Reserved	*1)
27	DMS	LVDS Option	*2)
28	NC	Reserved	*1)
29	NC	Reserved	*1)
30	GND	Ground	

*1) NC: Must let it open.

*2) LVDS OPTION PIN (DMS):

DMS (Pin 27)	LVDS format
GND	Non-JEIDA
NC	JEIDA

*3) DE / Sync:

DE/Syns (Pin 25)	Mode
NC	DE
GND	Sync

4.2 LVDS INTERFACE:

LVDS RECEIVER: Tcon (LVDS Rx merged)

	LVDS Pin	JEIDA-DATA	Non-JEIDA-DATA
TxOUT/RxIN0	TxIN/RxOUT0	R2	R0
	TxIN/RxOUT1	R3	R1
	TxIN/RxOUT2	R4	R2
	TxIN/RxOUT3	R5	R3
	TxIN/RxOUT4	R6	R4
	TxIN/RxOUT6	R7	R5
	TxIN/RxOUT7	G2	G0
TxOUT/RxIN1	TxIN/RxOUT8	G3	G1
	TxIN/RxOUT9	G4	G2
	TxIN/RxOUT12	G5	G3
	TxIN/RxOUT13	G6	G4
	TxIN/RxOUT14	G7	G5
	TxIN/RxOUT15	B2	B0
	TxIN/RxOUT18	B3	B1
TxOUT/RxIN2	TxIN/RxOUT19	B4	B2
	TxIN/RxOUT20	B5	B3
	TxIN/RxOUT21	B6	B4
	TxIN/RxOUT22	B7	B5
	TxIN/RxOUT24	Hsync	Hsync
	TxIN/RxOUT25	Vsync	Vsync
	TxIN/RxOUT26	DENA	DENA
TxOUT/RxIN3	TxIN/RxOUT27	R0	R6
	TxIN/RxOUT5	R1	R7
	TxIN/RxOUT10	G0	G6
	TxIN/RxOUT11	G1	G7
	TxIN/RxOUT16	B0	B6
	TxIN/RxOUT17	B1	B7
	TxIN/RxOUT23	Reserved	Reserved

4.3 INVERTER – CONNECTOR:

Connector (Receptacle): S14B-PH-SM3-TB (JST) or compatible
Mating connector (Plug): PRH-14(JST) or compatible

Pin No.	Symbol	Description	Note
1	VBL	Supply Voltage 24V	
2	VBL	Supply Voltage 24V	
3	VBL	Supply Voltage 24V	
4	VBL	Supply Voltage 24V	
5	VBL	Supply Voltage 24V	
6	GND	Ground	
7	GND	Ground	
8	GND	Ground	
9	GND	Ground	
10	GND	Ground	
11	NC	NC (Test pin or else)	
12	BLON	ON/OFF Control	(1)
13	VDIM	0V~5V	(2)
14	GND	GND	

[Note]

*1) ON/ OFF control: ON=5V, OFF=0V; when this PIN is disconnecting with power, the Inverter is in OFF status.

*2) VDIM: MAX=5V, MIN=0V; when this PIN is disconnecting with power, the output status of Inverter is the same as VDIM＝0.

5. INTERFACE TIMING (DE only mode)

5.1 TIMING SPECIFICATION

ITEM				SYMBOL	MIN.	TYP.	MAX.	UNIT
LCD Timing	DCLK		Freq.	f_{CLK}	62	80	84	MHz
			Cycle	t_{CLK}	14.7	12.5	11.9	ns
	DENA	Horizontal	Line Rate	f_H	37.1	48.6	56	kHz
			Horizontal Total Time	t_H	1575	1648	1936	t_{CLK}
			Horiaontal Effective Time	t_{HA}	1366	1366	1366	t_{CLK}
			Horizontal Blank Time	t_{HB}	209	282	570	t_{CLK}
		Vertical	Frame Rate	Fr	47	60	63	Hz
			Vertical Total Time	t_V	790	810	888	t_H
			Vertical Effective Time	t_{VA}	768	768	768	t_H
			Vertical Blank Time	t_{VB}	22	42	120	t_H
	Sync Mode	Horizontal	Horizontal sync time	tHsync	---	136	---	t_{CLK}
			Horizontal Back porch	tHBP	---	108	---	t_{CLK}
		Vertical	Vertical sync time	tVsync	---	5	---	t_H
			Vertical Back porch	tVBP	---	22	---	t_H

[Note]

1).The best result of over-driving is in frame rate =60Hz.

5.2 TIMING CHART

a. Horizontal Timing

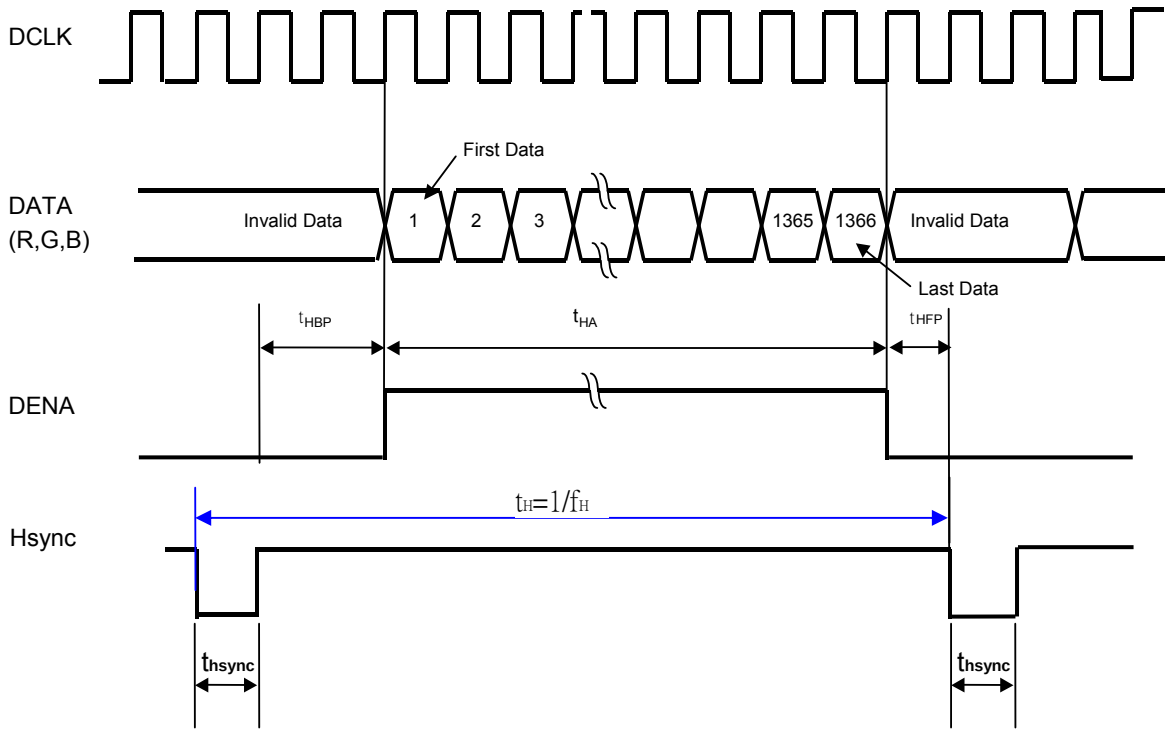

b. Vertical Timing Chart

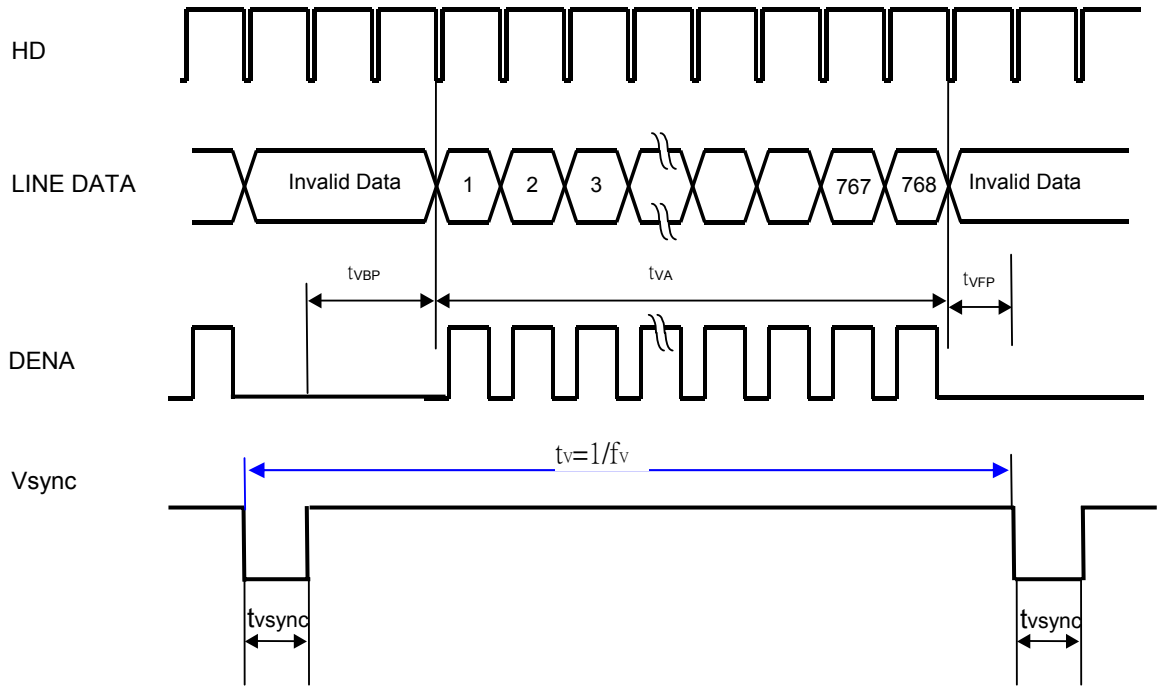

5.3 LVDS DATA MAPPING

a. None-JEIDA normal Specification

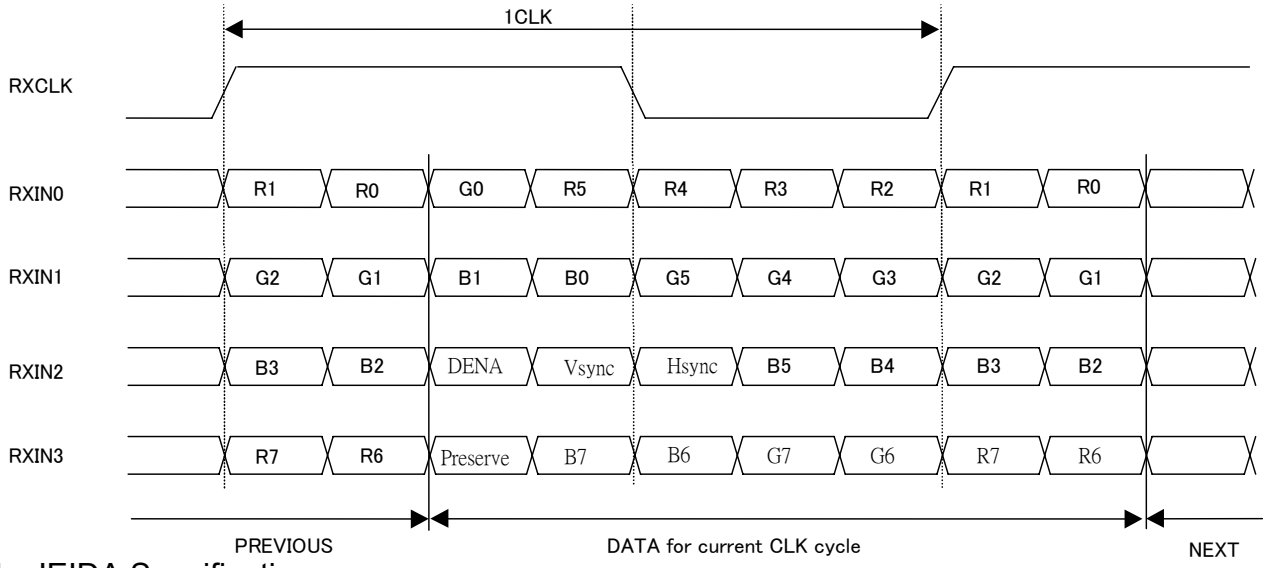

b. JEIDA Specification

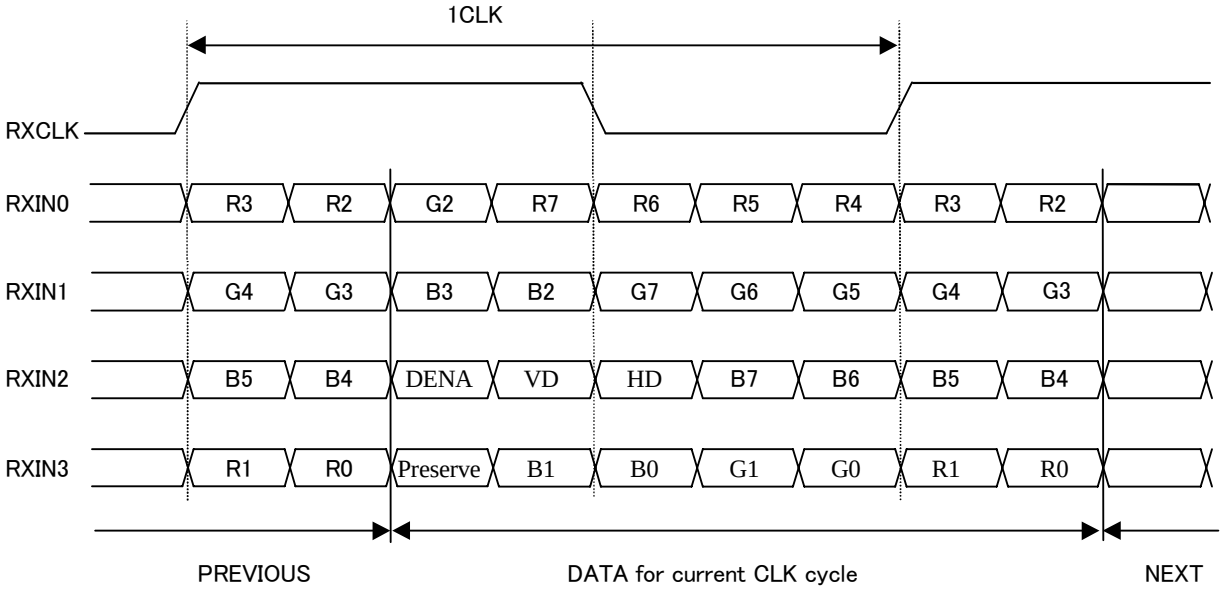

8bit LSB: R0,G0,B0

Parallel TTL Data Inputs Mapped to LVDS outputs

5.4 LVDS INTERFACE

8bit LSB: R0, G0, B0

JEIDA: Parallel TTL Data Inputs Mapped to LVDS outputs

TRANSMITTER(THC63LVD823)		INTERFACE CONNECTOR		TIMING CONTROLLER INPUT
PIN NO	INPUT DATA	HOST	TFT_LCD	
51	TA0	TxOUT0+ TxOUT0-	TA+ TA-	R2
52	TA1			R3
54	TA2			R4
55	TA3			R5
56	TA4			R6
3	TA5			R7 (MSB)
4	TA6			G2
6	TB0	TxOUT1+ TxOUT1-	TB+ TB-	G3
7	TB1			G4
11	TB2			G5
12	TB3			G6
14	TB4			G7 (MSB)
15	TB5			B2
19	TB6			B3
20	TC0	TxOUT2+ TxOUT2-	TC+ TC-	B4
22	TC1			B5
23	TC2			B6
24	TC3			B7 (MSB)
27	TC4			Hsync
28	TC5			Vsync
30	TC6			DENA
50	TD0	TxOUT3+ TxOUT3-	TD+ TD-	R0 (LSB)
2	TD1			R1
8	TD2			G0 (LSB)
10	TD3			G1
16	TD4			B0 (LSB)
18	TD5			B1
25	TD6			Reserved

5.5 COLOR DATA ASSIGNMENT

COLOR	INPUT DATA	R DATA								G DATA								B DATA							
		R7 MSB	R6	R5	R4	R3	R2	R1	R0 LSB	G7 MSB	G6	G5	G4	G3	G2	G1	G0 LSB	B7 MSB	B6	B5	B4	B3	B2	B1	B0 LSB
BASIC COLOR	BLACK	0	0	0	0	0	0	0	0	0	0	0	0	0	0	0	0	0	0	0	0	0	0	0	0
	RED(255)	1	1	1	1	1	1	1	1	0	0	0	0	0	0	0	0	0	0	0	0	0	0	0	0
	GREEN(255)	0	0	0	0	0	0	0	0	1	1	1	1	1	1	1	1	0	0	0	0	0	0	0	0
	BLUE(255)	0	0	0	0	0	0	0	0	0	0	0	0	0	0	0	0	1	1	1	1	1	1	1	1
	CYAN	0	0	0	0	0	0	0	0	1	1	1	1	1	1	1	1	1	1	1	1	1	1	1	1
	MAGENTA	1	1	1	1	1	1	1	1	0	0	0	0	0	0	0	0	1	1	1	1	1	1	1	1
	YELLOW	1	1	1	1	1	1	1	1	1	1	1	1	1	1	1	1	0	0	0	0	0	0	0	0
	WHITE	1	1	1	1	1	1	1	1	1	1	1	1	1	1	1	1	1	1	1	1	1	1	1	1
RED	RED(0)	0	0	0	0	0	0	0	0	0	0	0	0	0	0	0	0	0	0	0	0	0	0	0	0
	RED(1)	0	0	0	0	0	0	0	1	0	0	0	0	0	0	0	0	0	0	0	0	0	0	0	0
	RED(2)	0	0	0	0	0	0	1	0	0	0	0	0	0	0	0	0	0	0	0	0	0	0	0	0
	RED(253)	1	1	1	1	1	1	0	1	0	0	0	0	0	0	0	0	0	0	0	0	0	0	0	0
	RED(254)	1	1	1	1	1	1	1	0	0	0	0	0	0	0	0	0	0	0	0	0	0	0	0	0
	RED(255)	1	1	1	1	1	1	1	1	0	0	0	0	0	0	0	0	0	0	0	0	0	0	0	0
GREEN	GREEN(0)	0	0	0	0	0	0	0	0	0	0	0	0	0	0	0	0	0	0	0	0	0	0	0	0
	GREEN(1)	0	0	0	0	0	0	0	0	0	0	0	0	0	0	0	1	0	0	0	0	0	0	0	0
	GREEN(2)	0	0	0	0	0	0	0	0	0	0	0	0	0	0	1	0	0	0	0	0	0	0	0	0
	GREEN(253)	0	0	0	0	0	0	0	0	1	1	1	1	1	1	0	1	0	0	0	0	0	0	0	0
	GREEN(254)	0	0	0	0	0	0	0	0	1	1	1	1	1	1	1	0	0	0	0	0	0	0	0	0
	GREEN(255)	0	0	0	0	0	0	0	0	1	1	1	1	1	1	1	1	0	0	0	0	0	0	0	0
BLUE	BLUE(0)	0	0	0	0	0	0	0	0	0	0	0	0	0	0	0	0	0	0	0	0	0	0	0	0
	BLUE(1)	0	0	0	0	0	0	0	0	0	0	0	0	0	0	0	0	0	0	0	0	0	0	0	1
	BLUE(2)	0	0	0	0	0	0	0	0	0	0	0	0	0	0	0	0	0	0	0	0	0	0	1	0
	BLUE(253)	0	0	0	0	0	0	0	0	0	0	0	0	0	0	0	0	1	1	1	1	1	1	0	1
	BLUE(254)	0	0	0	0	0	0	0	0	0	0	0	0	0	0	0	0	1	1	1	1	1	1	1	0
	BLUE(255)	0	0	0	0	0	0	0	0	0	0	0	0	0	0	0	0	1	1	1	1	1	1	1	1

[Note]

1) Definition of gray scale:

Color (n): n indicates gray scale level, higher n means brighter level.

2) Data: 1-High, 0-Low

5.6 DATA MAPPING

D(1, 1)	D(2, 1)	---	D(X, 1)	---	D(1365, 1)	D(1366, 1)
D(1, 2)	D(2, 2)	---	D(X, 2)	---	D(1365, 2)	D(1366, 2)
¦	¦	+	¦	+	¦	¦
D(1, Y)	D(2, Y)	---	D(X, Y)	---	D(1365, Y)	D(1366, Y)
¦	¦	+	¦	+	¦	¦
D(1,767)	D(2,767)	---	D(X,767)	---	D(1365,767)	D(1366,767))
D(1,768)	D(2,768)	---	D(X,768)	---	D(1365,768)	D(1366,768)

6. BLOCK DIAGRAM

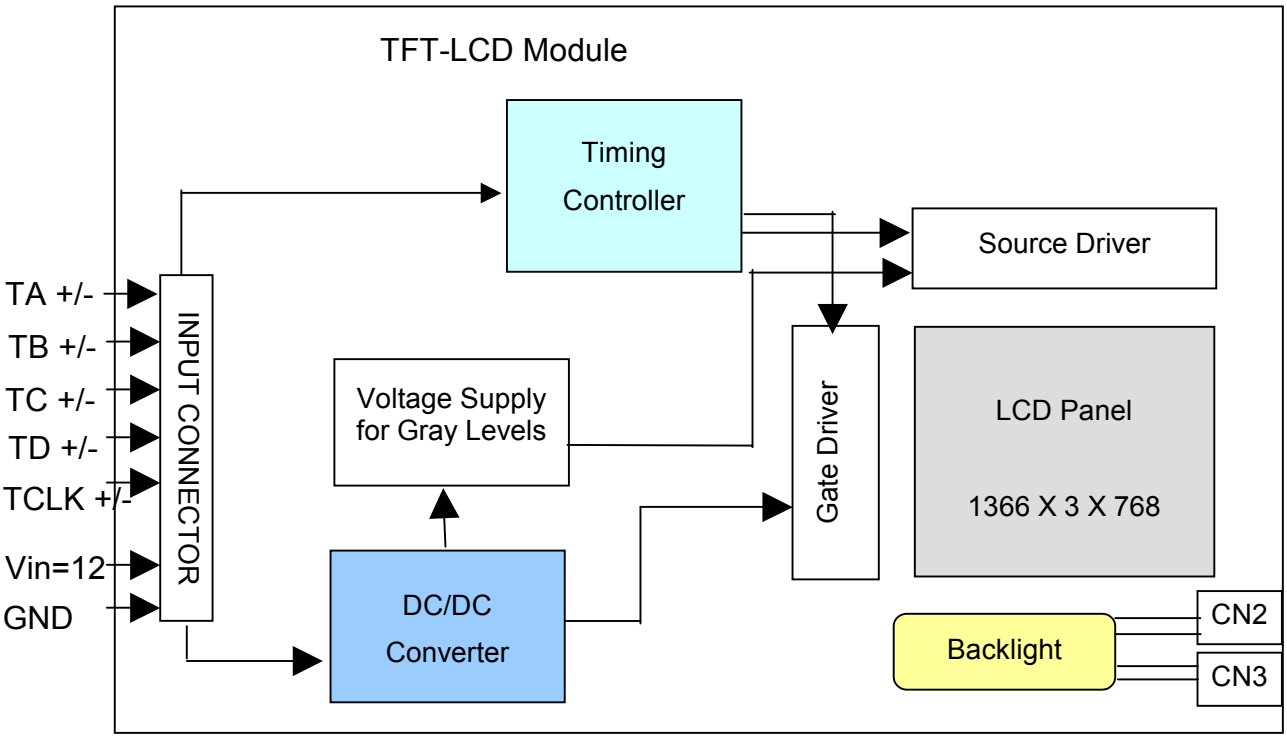

BACKLIGHT UNIT

Lamp connector
HV: BHR-02VS-1(JST)*8 or compatible
Mating connector: SM02 (8.0)B-BHS-1-TB (JST) or compatible
LV1: BHR-02VS-1(JST)*1 or compatible
Mating connector: SM02 (8.0)B-BHS-1-TB (JST) or compatible

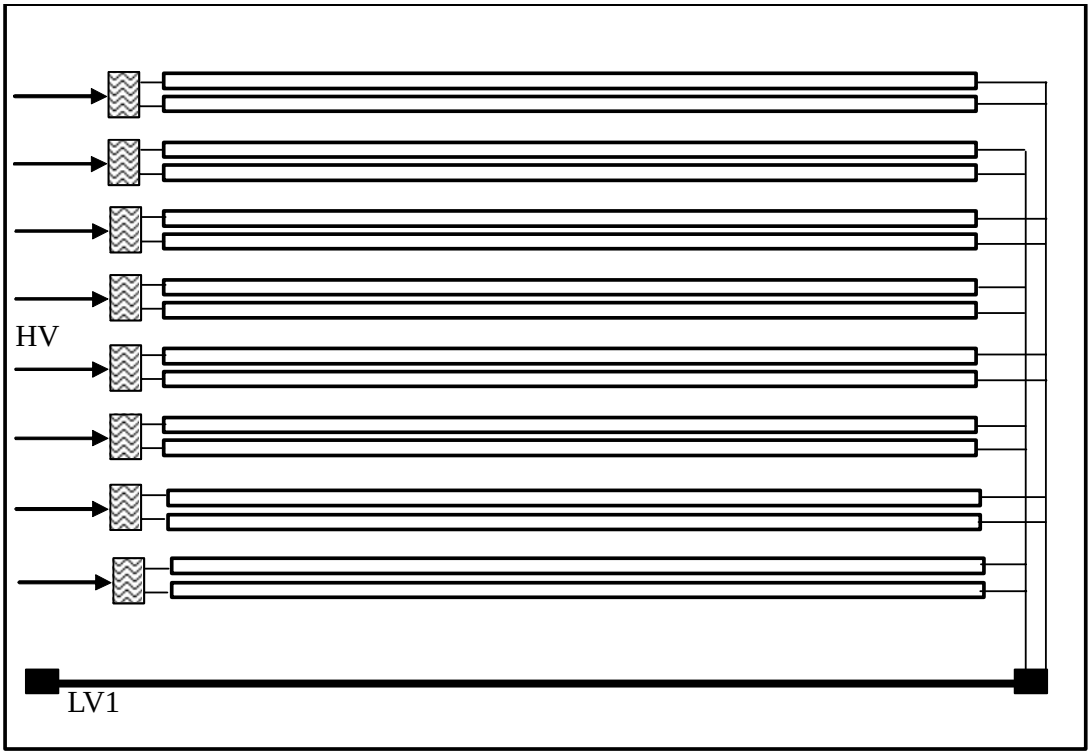

7. MECHANICAL SPECIFICATION

7.1 FRONT SIDE

(include Inverter, if the dimension did not to eerance, please refer to the table.) [Unit: mm]

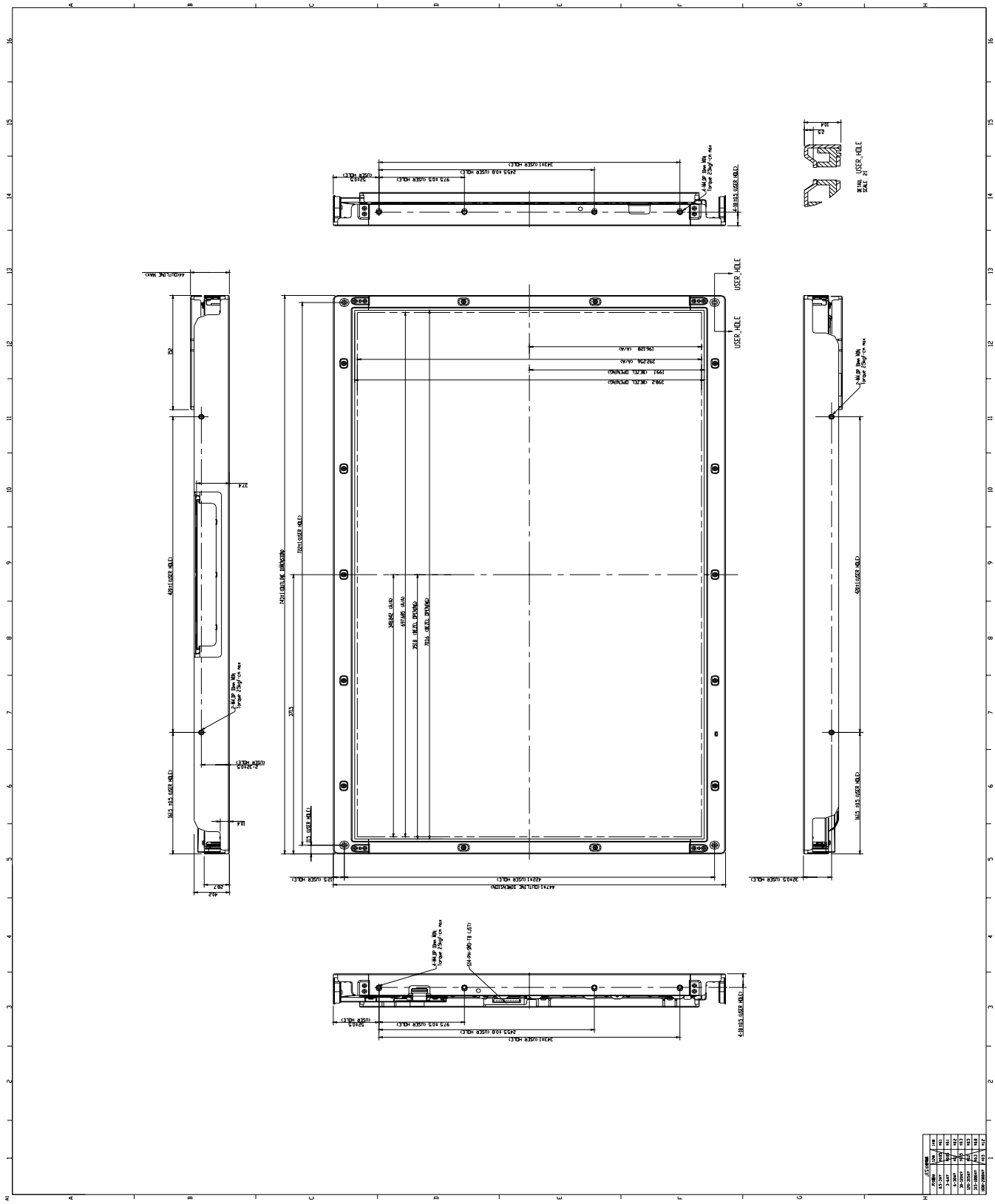

7.2 REAR SIDE

(include Inverter, if the dimension did not to eerance, please refer to the table.) [Unit: mm]

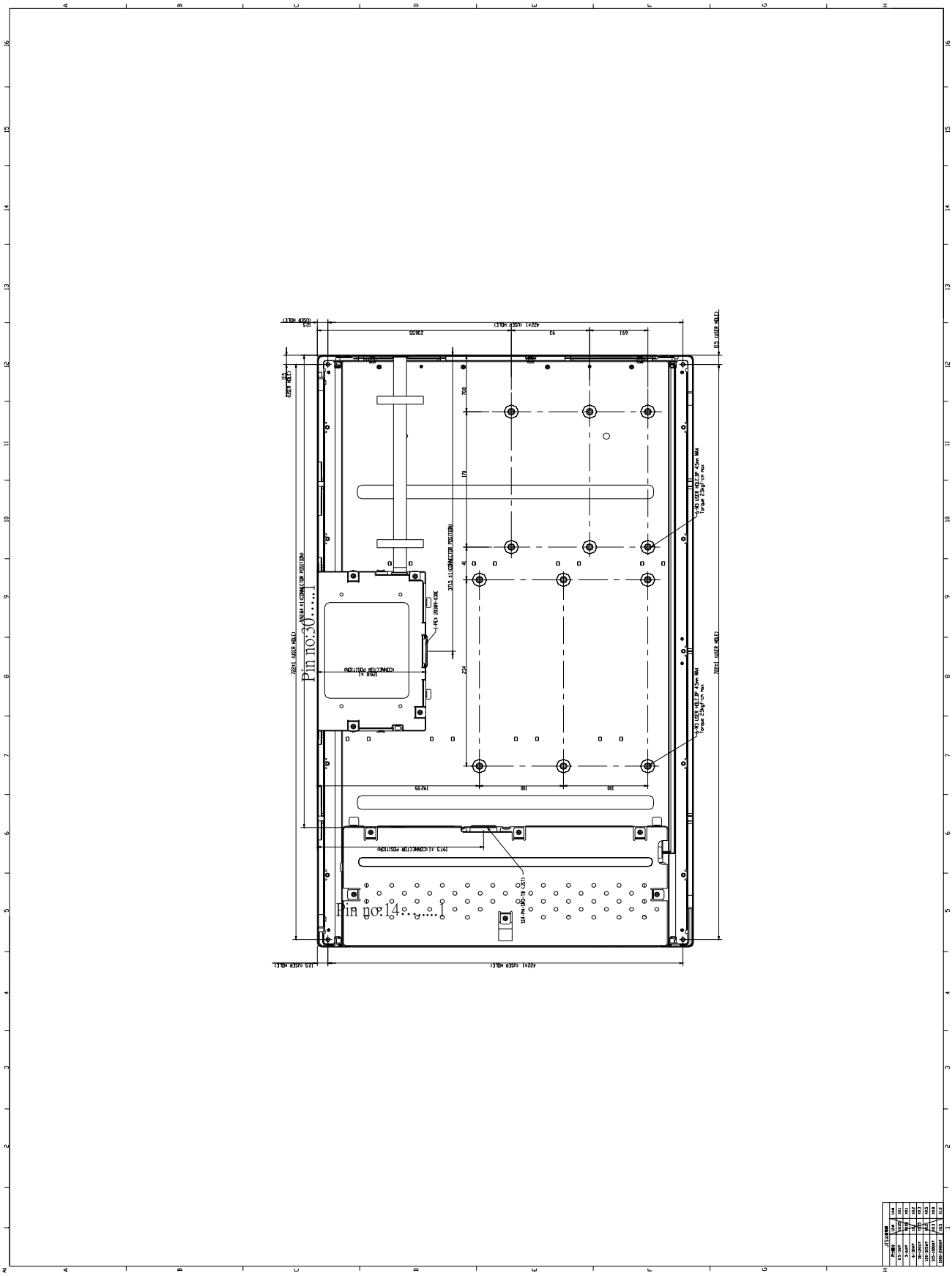

8.OPTICAL CHARACTERISTICS

Ta = 25°C, VCC=12V

ITEM		SYMBOL	CONDITION	MIN.	TYP.	MAX.	UNIT	REMARKS
Contrast (CEN)		CR	θ=ψ= 0° Point-5	700	1000	--	--	*1)*2)*3)
Luminance	Central luminance	Lwc	θ=ψ= 0°	450	550	--	cd/m^2	*9)
	5P Luminance (AVG)	Lw9	θ=ψ= 0°	--	500	--	cd/m^2	*2)*3)
	Uniformity	△Lw	θ=ψ= 0°	75	--	--	%	*2)*3)
Response Time (White – Black)		tr	θ=ψ= 0°	--	10	(17)	ms	*3)*4)
		tf	θ=ψ= 0°		6	(8)	ms	*3)*4)
Response Time (Gray to gray average)		trg, tfg		--	10	(15)	ms	*5)
Image sticking		tis	4 h	--	--	(3)	sec	*6)
View angle	Horizontal	ψ	CR ≧ 10 Point-5	-80~80	-85~85	--	°	*2)*3)
	Vertical	θ		-80~80	-85~85	--	°	*2)*3)
Crosstalk Ratio		CMR	θ=ψ= 0°	--	--	(1)	%	*3)*7)
Color Chromaticity	Red	Rx Ry	θ=ψ= 0° Point-5	TBD	TBD	TBD	--	*2)*3)
	Green	Gx Gy		TBD	TBD	TBD		
	Blue	Bx By		TBD	TBD	TBD		
	White	Wx Wy		TBD	0.283 0.297	TBD		
Color Temperature		Tc		--	9300	--	K	*3)
Color Gamut		CG		--	75	--	%	*8)

[Note]

These items are measured using: BM-5A (TOPCON)

View angle: EZ contrast XL-88, Response Time: Westar TRD-100

[under the dark room condition (no ambient light).]

Definition of these measurement items is as follows:

*1) Definition of Contrast Ratio:〔These items are measured using BM-5A (TOPCON) under the dark room condition (no ambient light).〕

CR=ON (White) Luminance/OFF (Black) Luminance

*2) Definition of Luminance, Luminance uniformity, Contrast, and the Deviation of Color Coordinate:

Luminance and Contrast: To measure at the center position “5” on the screen (NO.5), see Figure.8-1 below.

Luminance uniformity: Lw (MAX) and Lw(MIN) are the maximum and minimum luminance value measure at the position “1~5” on the screen (NO.1~5), see Figure.8-1 and below show equation:

ΔLw＝[(Lw(MIN)) / Lw(MAX)] × 100%

The Deviation of Color Coordinate: To measure at the position “1~5” on the screen (NO.1~5), see Figure.8-1 below.

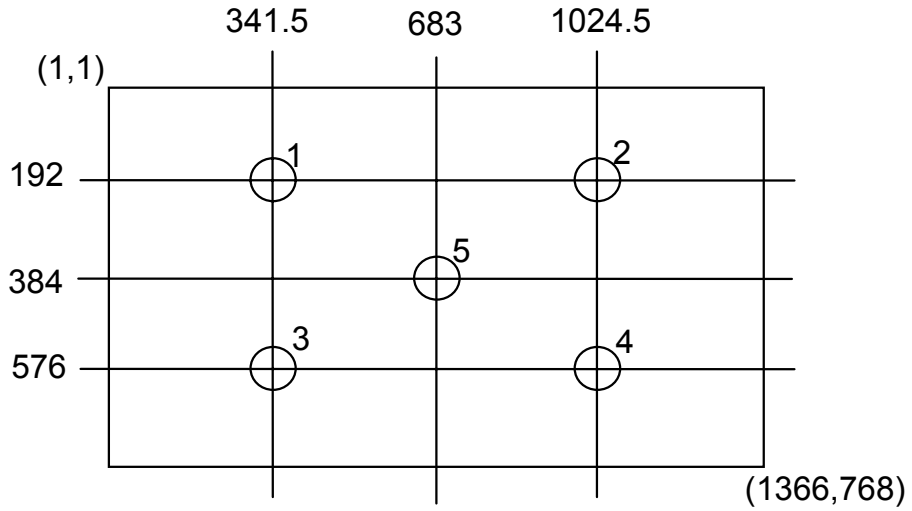

Figure 8-1. Measurement Positions

*3) Definition of Viewing Angle (θ, ϕ):

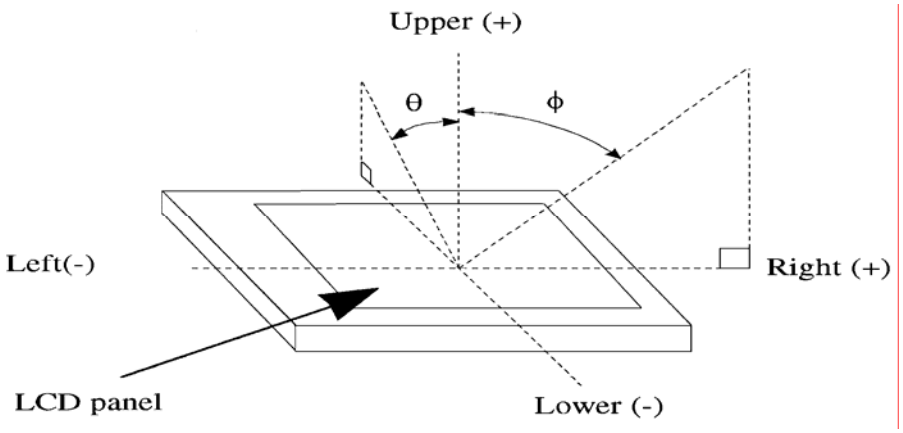

Figure 8-2. Definition of Viewing Angle

*4) Definition of Response Time (White – Black)

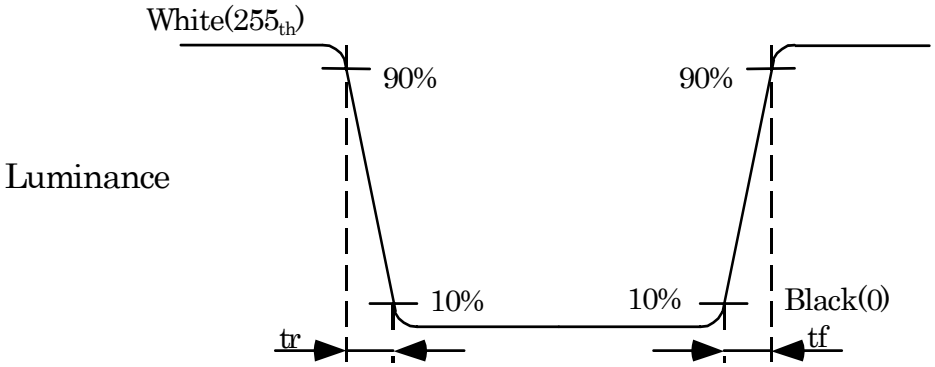

Figure 8-3. Definition of Response Time (White – Black)

*5) Definition of Response Time (Gray to Gray, Average)

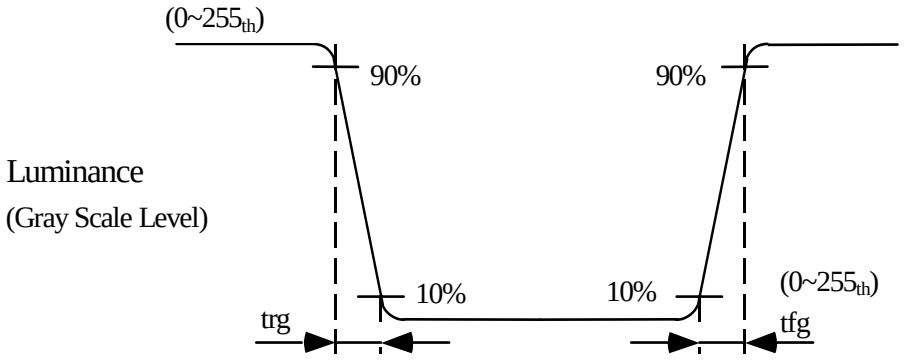

Figure 8-4. Definition of Response Time (Gray to Gray)

The driving signal time means the signal of gray level 0, 31, 63, 95, 127, 159, 191, 223, 255. Gray to gray average means the average switching time of gray level 0, 31, 63, 95, 127, 159, 191, 223, 255 to each other.

The LCD module should be stabilized at given temperature for 1 hour to avoid abrupt temperature change during measuring. In order to stabilize the luminance, the measurement should be executed

after lighting Backlight for 1 hour in a windless room.

*6) Image Sticking Test Method:

Continuously display the test pattern shown in the figure below for specified time. To change the module frame to gray pattern (gray 120 pattern), and it's displaying grade still under specfication.

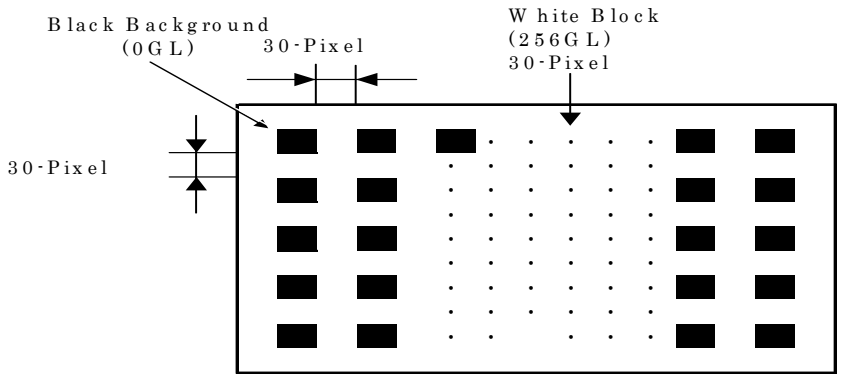

Figure 8-5. The Pattern of Image Sticking Test

*7) Definition of Cross talk Ratio

CMR = MAX (***(| (LB1-LA) / LC |) × 100% , (| (LB2 – LA) / LC |) × 100%***)

LA: Pattern A (Half-Tone pattern) Measure point Luminance

LB1, LB2: Pattern B1, Pattern B2 Measure point Luminance

LC: Pattern C (white pattern) Measure point Luminance

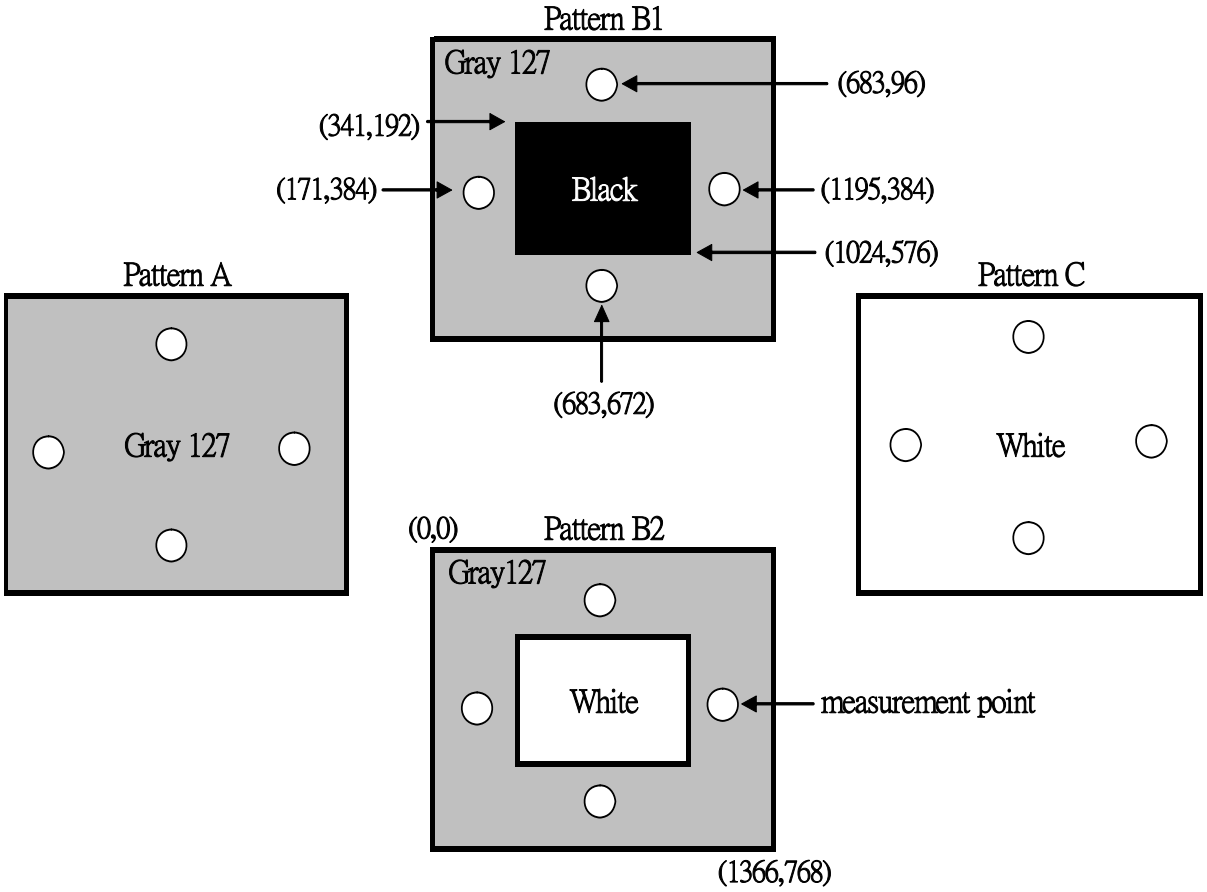

Figure 8-6. The Pattern of Cross talk Test

*8) Definition of Color Gamut:

To measure RGB three sub-pixels color gamut coordinate at CIE coordinate chart from the center of module, to form a triangle area = A_{RGB}.

RGB three sub-pixels of NTSC at CIE coordinate chart to form a triangle area = N_{RGB}.

$$CG = \frac{A_{RGB}}{N_{RGB}} \times 100$$

*9) Definition of Central luminance:

After lighting on the panel for 30 mins, then the Central luminance test proceeded.

The definiton of TYP value is under status of Inverter Dimming Voltage=5V.

9.RELIABILITY TEST CONDITIONS

9.1 TEMPERATURE AND HUMIDITY

TEST ITEMS	CONDITIONS
High Temperature Operation	50℃; 240hrs
High Temperature Storage	60℃; 240hrs
High Temperature High Humidity Operation	50℃; 90% RH; 240 hrs (No condensation)
Low Temperature Operation	0℃; 240 hrs
Low Temperature Storage	-20℃; 240 hrs

9.2 SHOCK AND VIBRATION

ITEMS	CONDITIONS
Shock (Non-Operation)	Shock level: 980m/s^2 (100G) Waveform: half sinusoidal wave, 2ms Number of shocks: one shock input in each direction of three mutually perpendicular axes for a total of six shock inputs.
Vibration (Non-Operation)	Vibration level: 9.8m/s^2 (1.0G) zero to peak Waveform: sinusoidal Frequency range: 10 to 300 Hz Frequency sweep rate: 0.5 octave/min Duration: one sweep from 10 to 300Hz in each of three mutually perpendicular axis (each x, y, z axis:10 min, total 30 mins)

9.3 JUDGMENT STANDARD

The judgment of the above test should be made as follow:

Pass: Normal display image with no obvious non-uniformity and no line defect.

Partial transformation of the module parts shall be ignored.

Fail: No display, obvious non-uniformity, or line defects.

10. PACKAGING

10.1 PACKING SPECIFICATIONS

(1) 3 LCD TV modules/1 Box

(2) Box dimensions: 975(L) x 375(W) x 562(H)

(3) Weight: approximately 31.9kg (3 modules per box)

10.2 PACKING METHOD

Figure 1 and Figure 2 are the packing method.

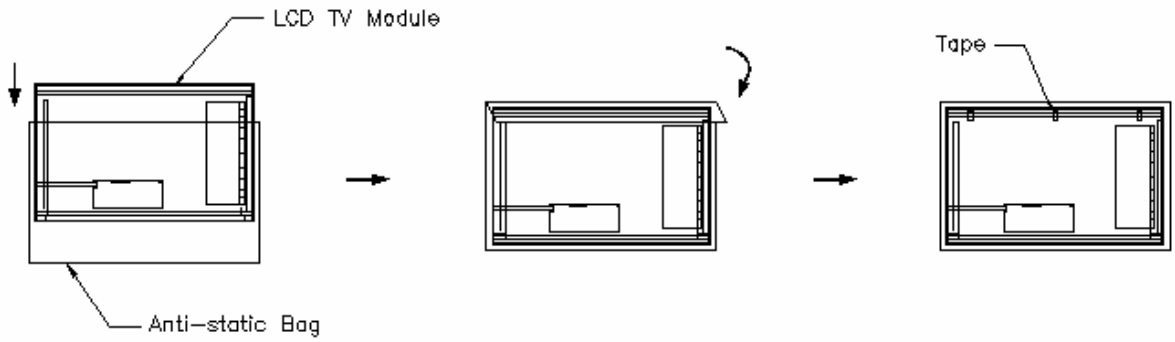

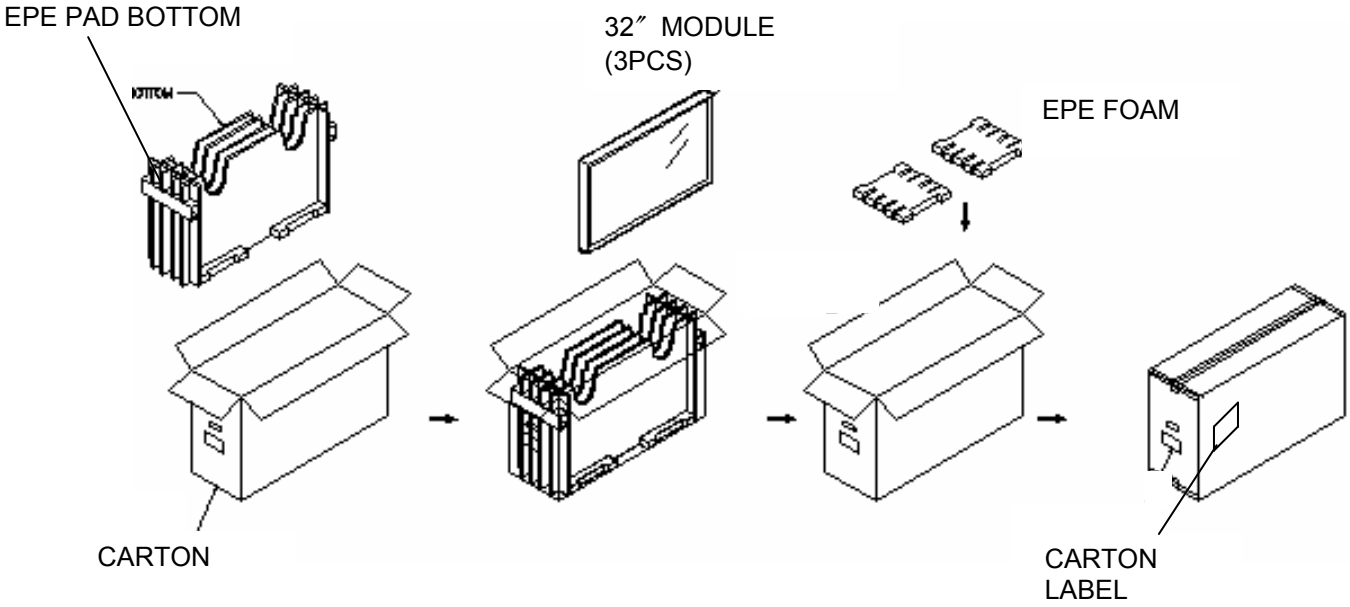

Figure 1 Packing Method

(1) Corner protector: L1125 x 50mm x 50mm

(2) Pallet: L1000 x W1150 x H130mm

(3) Bottom Cap: 1000 x W1150 x H130mm

(4) Pallet Stack: 1000 xW1150 x H1250mm

(5) Gross: 273kg

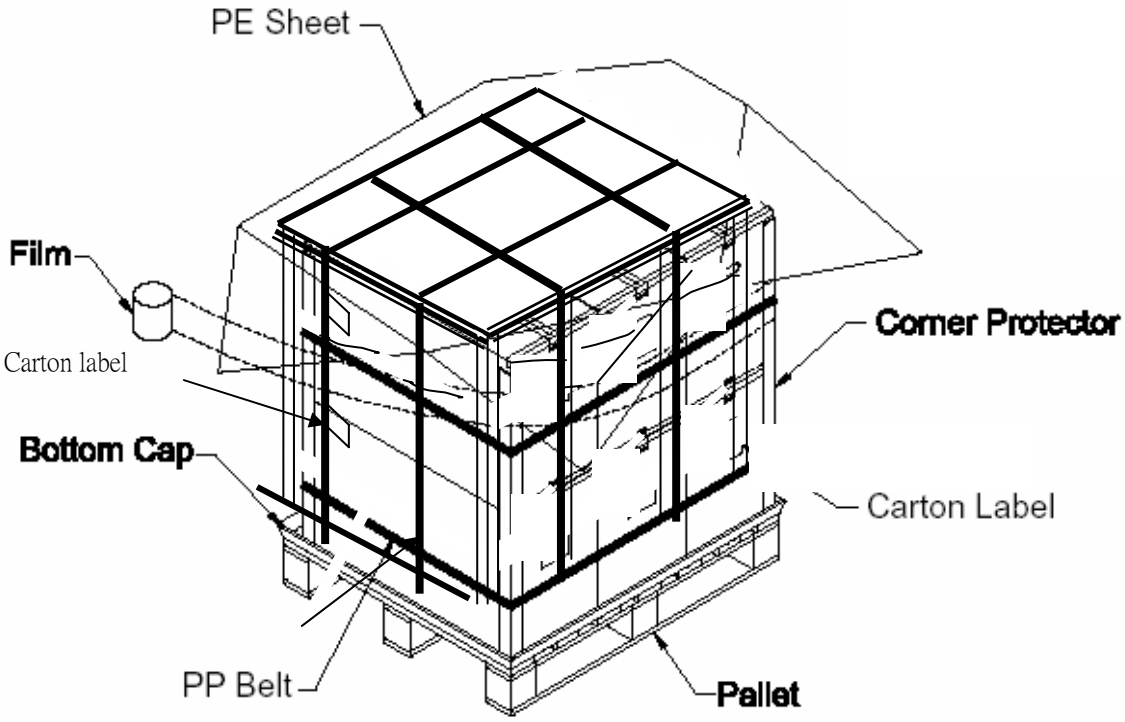

Figure 2 Packing Method

11. HANDLING PRECAUTIONS FOR TFT-LCD MODULE

Please pay attention to the followings in handling TFT-LCD products.

11.1 ASSEMBLY PRECAUTION

(1) Please use the mounting hole on the module side in installing and do not beading or wrenching
LCD in assembling. And please do not drop, bend or twist LCD module in handling.

(2) Please design display housing in accordance with the following guidelines.

- Housing case must be destined carefully and do not to put stresses on LCD all sides or wrench module. The stresses may cause non-uniformity even if there is no non-uniformity statically.
- Keep sufficient clearance between LCD module back surface and housing when the LCD module is mounted. Approximately 1.0 mm of the clearance in the design is recommended taking into account the tolerance of LCD module thickness and mounting structure height on the housing.
- When some parts, such as, FPC cable and ferrite plate, are installed underneath the LCD module, still sufficient clearance is required, such as 0.5mm. This clearance is, especially, to be reconsidered when the additional parts are implemented for EMI countermeasure.
- Design the inverter location and connector position carefully so as not to put stress on lamp cable.
- Keep sufficient clearance between LCD module and the other parts, such as inverter and speaker so as not to interface the LCD module. Approximately 1.0mm of the clearance in the design is recommended.

(3) Please do not push or scratch LCD panel surface with any-thing hard. And do not soil LCD panel surface by touching with bare hands. (Polarizer film and surface of LCD panel are easy to be flawed.)

(4) Please do not press any parts on the rear side such as source TCP, gate TCP, control circuit board and FPC during handling the LCD module. If pressing rear part could not be avoided, handle the LCD module with care not to damage them.

(5) Please wipe out LCD panel surface with absorbent cotton or soft clothe in case of it being soiled.

(6) Please wipe out drops of adhesives like saliva and water on LCD panel surface immediately. They might damage to cause panel surface variation and color change.

(7) Please do not take a LCD module to pieces and reconstruct it. Resolving and reconstructing modules may cause them not to work well.

(8) Please do not touch metal frames with bare hands and soiled gloves. A color change of the metal frames can happen during a long preservation of soiled LCD modules.

(9) Please pay attention to handling lead wire of backlight so that it is not tugged in connecting with inverter.

11.2 OPERATING PRECAUTIONS

(1) Please be sure to turn off the power supply before connecting and disconnecting signal input cable.

(2) Please do not change variable resistance settings in LCD module. They are adjusted to the most suitable value. If they are changed, it might happen LCD does not satisfy the characteristics specification.

(1) Please consider that LCD backlight takes longer time to become stable of radiation characteristics in low temperature than in room temperature.

(2) A condensation might happen on the surface and inside of LCD module in case of sudden change of ambient temperature.

(3) Please pay attention to displaying the same pattern for a very long time. Image might stick on LCD. If then, time going on can make LCD work well.

(4) Please obey the same caution descriptions as ones that need to pay attention to ordinary electronic parts.

11.3 PRECAUTIONS WITH ELECTROSTATICS

(1) This LCD module use CMOS-IC on circuit board and TFT-LCD panel, and so it is easy to be affected by electrostatics. Please be careful with electrostatics by the way of your body connecting to the ground and so on.

(2) Please remove protection film very slowly on the surface of LCD module to prevent from electrostatics occurrence.

11.4 STORAGE PRECAUTIONS

(1) When you store LCD for a long time, it is recommended to keep the temperature between 0℃ ~40℃ without the exposure of sunlight and keep the humidity less than 90%RH.

(2) Please do not leave the LCD in the environment of high humidity and high temperature such as 60℃ 90%RH.

(3) Please do not leave the LCD in the environment of low temperature(can not lower than -20℃).

11.5 SAFETY PRECAUTIONS

(1) When you waste LCD, it is recommended to crush damaged or unnecessary LCD into pieces and wash them off with solvents such as acetone and ethanol, which should later be burned.

(2) If any liquid leaks out of a damaged-glass cell and comes in contact with the hands, wash off thoroughly with soap and water.

11.6 OTHERS

(1) A strong incident light into LCD panel might cause display characteristics' changing inferior because of polarizer film, color filter, and other materials becoming inferior. Please do not expose LCD module direct sunlight Land strong UV rays.

(2) Please pay attention on the side of LCD module do not contact with other materials in preserving it alone.

(3) For the packaging box, please pay attention to the followings:

- Packaging box and inner case for LCD are designed to protect the LCD from the damage or scratching during transportation. Please do not open except picking LCD up from the box.
- Please do not pile them up more than 3 boxes. (They are not designed so.) And please do not turn over.
- Please handle packaging box with care not to give them sudden shock and vibrations. And also please do not throw them up.
- Packing box and inner case for LCD are made of cardboard. So please pay attention not to get them wet. (Such as keep them way the high humidity or wet place.)

NOTE : THIS RELEASED DRAWING WAS PRODUCED BY COMPUTER , DO NOT UPDATE MASTER MANUALLY

DWG. REV.	ZONE	DESCRIPTION	DATE	REVISOR

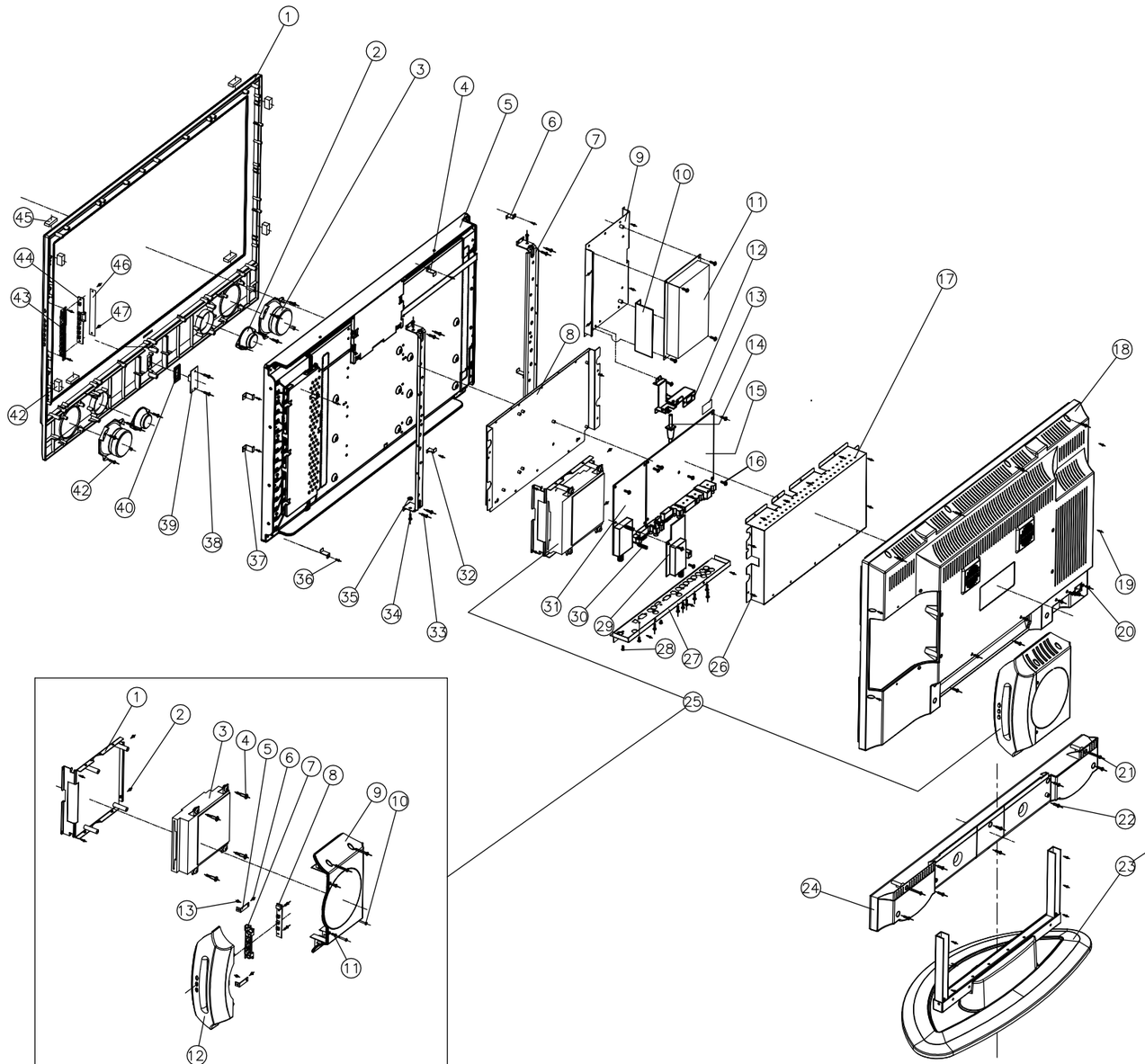

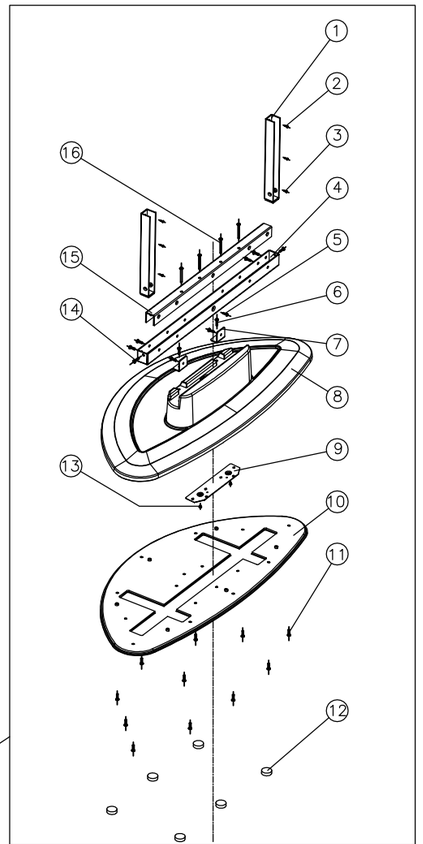

IETM	PART NO.	DESCRIPTION	QTY	MATERIAL
16	603-407040-00	MACH SCREW TRS M4X40MM	4	
15	429-L32AB36-01	U TOP CROSSBEAM	1	SECC T=2
14	602-407008-00	MACH.SCREW WASHER 4X8	12	
13	614-300108-00	S-TAP. SCREW 3X8	2	
12	370-42D101-01	RUBBER FOOT	6	RUBBER
11	610-350210-10	S-TAP.SCREW 3.5X10	11	
10	429-L32AB11-01	BASE SHEET	1	SECC T=1.0
9	429-L32AB09-01	SECURE SHEET	1	SECC T=1.0
8	231-L32AB21-01R	BASE COVER	1	HIPS
7	429-L32AB03-01	L SHEET	2	SECC T=2
6	604-407012-00	MACH.SCREW M4X12	2	
5	601-407010-00	MACH.SCREW M4X10	1	
4	429-L32AB35-01	U BOTTOM CROSSBEAM	1	SECC T=2
3	604-407016-00	MACH.SCREW M4X16	4	
2	614-400412-00	S-TAP. SCREW BID 4X12	2	
1	429-L32AD13-011	SECURE LEG	2	SECC T=2.0

IETM	PART NO.	DESCRIPTION	QTY	MATERIAL
13	614-300105-10	S-TAP. SCREW BID 3X5	2	
12	258-L32AD01-01RV	DVD KEY PANEL	1	HIPS
11	611-300108-00	S-TAP.SCREW FLAT M3X8	2	
10	614-300125-00	S-TAP.SCREW BIND M3X25	4	
9	236-L32AD01-01RV	DVD COVER	1	HIPS
8	771KL27AD02-01	PCB ASSY DVD KEY	1	
7	277-L32AD12-01S	DVD FUNCTION KEY	1	ABS
6	614-300108-10	S-TAP SCREW BID 3.0X8	6	
5	429-L32AD09-01	"L" BKT FRO DVD COVER	2	SECC T=1.0
4	609-L32AD01-01	SPECIAL MACH SCREW M4X15	4	
3	E7801-D01001	PCB ASSY DVD BOARD	1	
2	600-305004-00	MACH SCREW PAN M3X4	2	
1	481-L32AD03-01S	DVD SHIELDING BOTTOM	1	SECD T=1.0

IETM	PART NO.	DESCRIPTION	QTY	MATERIAL
47	614-220206-10	S-TAP. SCREW BID 2.2X6	2	
46	384-L32AD03-01H	PVC SHEET FOR KEY	1	PVC
45	379-L32SD02-01Y	RUBBER CUSHION-B	4	RUBBER
44	771KL27AD01-01	FUNCTION KEY PCB ASSY	1	
43	277-L32AD11-00S	FUNCTION KEY	1	ABS
42	379-L32SD01-01Y	RUBBER CUSHION-A	4	RUBBER
41	612-300110-10	S-TAP.SCREW WHR 3X10	12	
40	269-42SD01-01L	REMOTE RECEIVE LENS	1	ABS
39	771BL27AD01-01	REMOTE PCB	1	
38	614-260208-10	S-TAP SCREW BID 2.6X8	4	
37	429-L32SD03-01	Z BKT FOR PANEL-A	2	SECC T=1.0
36	614-300108-10	S-TAP SCREW BID 3X8	17	
35	530-100053-15	FIBBER WASHER	4	
34	604-407008-10	TAPTITE SCREW 4X8 BS	4	
33	614-400110-10	SELF TAPPING SCREW	8	
32	429-L32SD05-01	Z BKT FOR PANEL-C	2	SECC T=1.0
31	771S42D102-01	ATSC TUNER PCB ASSY	1	
30	649-42AA02-01	CONNECTION BOSS	2	
29	771L37AD01-01	NTSC TUNER PCB ASSY FOR LCD37	1	
28	624-204005-10	S-TAP SCREW BID 2.0X5	1	
27	436-L32AB0D-01S	RERMINAL SHEET	1	SECD T=0.8
26	604-305005-10	MACH.SCREW BID 3X8	15	
25	774-L32AD02-04	DVD ASSY FOR LCT3201TD	1	
24	206-L32AD01-00R	SPEAKER CABINET BACK	1	HIPS
23	734-L32AD03-01	BASE ASSY		
22	614-400416-00	S-TAP.SCREW BID 4X16	14	
21	614-400445-00	S-TAP SCREW BID M4X45	2	
20	601-305008-00	MACH.SCREW CTS 3X8	8	
19	610-300115-00	S-TAP SCREW ROUND3X15	4	
18	202-L32AD11-01AV	BACK CABINET	1	HIPS(94V0)
17	483-L32AB22-01S	SHIELD COVER(VSC)	1	SPTE T=0.3
16	602-305006-10	MACH. SCREW WHE 3X6	14	
15	771EL32AD03-02	MAIN PCB ASSY	1	
14	E3404-157009	AC CORD UL 1.88M FOR LCD32 MT8202	1	
13	388-L32AD01-01	PVC SHEET FOR POWER CORD BKT 20X30X0.5	1	
12	426-L32AD02-01S	POWER CORD BKT.	1	SECC T=0.8
11	E7801-P02002	POWER ASSY	1	
10	384-L32AD02-01H	PVC SHEET FOR POWER	1	PVC
9	481-L32AD01-01S	POWER SHIELDING BOTTOM	1	SECC T=0.8
8	481-L32AB06-01S	SHIELDING BOX(VSC)	1	SECC T=0.8
7	420-L32AD02-01S	MINA SUPORT	2	SECC T=1.5
6	429-L32SD04-01	Z BKT FOR PANEL B	4	SECC T=1.0
5	E6203-32TD02	PANEL ASSY-CPT	1	
4	429-L32AS0A-01	Z BKT. FOR PANEL	1	SECC T=1.0
3	E4801-124001	BOURDON SPEAKER	2	
2	E4802-014001	ALT SPEAKER	2	
1	200-L32AD02-01AAV	FRONT CABINET	1	HIPS(94V0)

DRAWN.	LCQ					
CHECKED						
APPRD.						
3rd ANGLE PROJECTION						

TOLERENCE UNLESS OTHERWISE SPECIFIED

0:	±0.30
0.0	±0.10
0.00:	±0.05
ANGULAR:	±0.3°
UNIT :	mm

KAWA ELECTRONIC R & D CENTRE

MATL.

FINISH

TITLE LCT3201AD-EXP-CPT

MODEL NO. LC32HAD

A3 PART NO. DWG. NO.

SCALE QTY. SHEET 1 OF 1

Item	Part Number	Part Description	Usage / unit	Unit	Key/Spare
	LCT32ADNDA1TS-B01	AKAI LCD32" (LCT3201AD)S-MT8202+CPT AC120V/60HZ USA SILVER			
1>	510-L32AD01-03AKA	CARTON BOX AKAI LCT32AD (MTK8202) K	1	Piece	K
2>	580-L32ADHS-TU14L	IB E FOR AKAI LCT3201AD USA CPT DTV +DVD S-MT8202(w/o power switch)	1	Piece	K
	580-L32ADHS-TU04L	IB E FOR AKAI LCT3201AD USA CPT DTV +DVD S-MT8202 (w power switch)	1	Piece	K
3>	E7501-061001	REMOTE CONTROL K002 AKAI FOR MT8202 COMBO 60KEYS SIL/BLK	1	SET	K
4>	771EL32AD03-02	PCB ASSY MAIN S-MT8202 ATSC & DVD FOR 32LCD CPT	1	SET	K
5>	771L37AD01-01	NTSC TUNER PCB ASSY FOR LCD37	1	SET	K
6>	771S42D102-01	ATSC TUNER PCB ASSY (MT5111CE)	1	SET	K
7>	200-L32AD02-01AAV	CABINET FRONT SIL/BLK CPT PANEL AV	1	Piece	S
8>	202-L32AD11-01AV	CABINET BACK BLACK	1	Piece	S
9>	206-L32AD01-01RV	SPEAKER CABINET BACK BLACK LCT32AD R	1	Piece	S
10>	236-L32AD01-01RV	DVD COVER BLACK LCT32AD R	1	Piece	S
11>	258-L32AD01-01RV	DVD KEY PANEL GREY	1	Piece	S
12>	269-42SD01-01L	REMOTE RECEIVE LENS	1	Piece	S
13>	277-L32AD11-01S	FUNCTION KEY SIL(MATERIAL:BLACK) LCT32SD	1	Piece	S
14>	277-L32AD12-01S	DVD FUNCTION KEY BLACK LCT32AD S	1	Piece	S
15>	300-L32AD14-02C	POLYFOAM TOP L32AD C	1	Piece	S
16>	300-L32AD15-02C	POLYFOAM BOTTOM	1	Piece	S
17>	310-041204-01V	POLYBAG 4"X12"X0.04 AV	1	Piece	S
18>	310-111404-07V	POLYBAG 11"X14"X0.04 FV	1	Piece	S
19>	310-423850-07V	BAG LAMIFILM 42"X38"X0.5MM	1	Piece	S
20>	370-42D102-01	PAD CORD SPONG FOR SPK	1	Piece	S
21>	384-L32AB01-04AHA	PVC SHEET FOR TERMINAL (MTK-8202) W/DVD	1	Piece	S
22>	384-L32AD02-01H	PVC SHEET FOR POWER 230X180X0.5 H	1	Piece	S
23>	384-L32AD03-01H	PVC SHEET FOR KEY	1	Piece	S
24>	387-L32AD01-04AHA	MODEL PLATE AKAI LCT3201AD (MTK-8202+CMO PANEL) H	1	Piece	S
25>	388-L32AD01-01	PVC SHEET FOR POWER CORD BKT 20X30X0.5MM	1	Piece	S
26>	426-L32AD02-01S	POWER CORD BRACKET ASSY	1	Piece	S
27>	436-L32AB0D-01S	TERMINAL SHEET	1	Piece	S
28>	481-L32AB06-01S	SHIELDING BOTTOM MT8202	1	Piece	S
29>	481-L32AD01-01S	SHIELD BOX FOR POWER L32AD S	1	Piece	S

Item	Part Number	Part Description	Usage / unit	Unit	Key/Spare
30>	481-L32AD03-01S	SHIELD BOX DVD FOR AUO L32AD S	1	Piece	S
31>	483-L32AB22-01S	SHIELDING COVER	1	Piece	S
32>	486-M32111-01	NAME PLATE M AKAI	1	Piece	S
33>	521-300055-01	FELT PAPER 300X5X0.5MM	4	Piece	S
34>	522-421D01-01	MASKING PAPER	1	Piece	S
35>	530-080032-10	FBP WHR 3.2X8.0X1.0	1	Piece	S
36>	530-100053-15	FIBBER WASHER 10.0X5.3X1.5MM W/ADHESIVE	4	Piece	S
37>	563-119-	SERIAL NO. LABEL	1	Piece	S
38>	568-P46T02-02	WARNING LB ENG 42SF NIL	1	Piece	S
39>	579-42D102-09	SERIAL NO/BAR CODE LABEL 42D1	1	Piece	S
40>	579-42D105-01	PROTECTIVE EARTH LABEL FOR ESA 42TD1	1	Piece	S
41>	579-L27AD09-01	CAUTION LABEL ENG AKAI	1	Piece	S
42>	579-L32AD02-03APA	UPC LABEL AKAI LCT3201AD P	2	Piece	S
43>	579-L32AD03-02	CLASS I LASER PRODUCT LOGO	1	Piece	S
44>	579-L32AD04-01	LASER WARNING LABEL AKAI LC32AD	1	Piece	S
45>	590-L32AD01-03	WARRANTY CARD AKAI LCT3201AD	1	Piece	S
46>	593-L32AD01-06	INSERTION CARD AKAI LCT3201AD	1	Piece	S
47>	E3404-157009	AC CORD UL 1.88M FOR LCD32 MT8202	1	Piece	S
48>	E3421-924009	WIRE ASSY 2P L120	2	Piece	S
49>	E3421-925118	WIRE ASSY 8P2.5/7P2.0 L170MM 5V 12V SIGNAL POWER MT8202	1	Piece	S
50>	E3421-925119	WIRE ASSY P2.5 11P/11P L400MM 5V SIGNAL POWER MT8202	1	Piece	S
51>	E3421-925127	WIRE ASSY TJC3-2Y L860 SPK-R MT8202	1	Piece	S
52>	E3421-925133	WIRE ASSY TJC3-3Y L650 SPK-L MT8202	1	Piece	S
53>	E3421-926119	WIRE ASSY P2.0 8P L=215 TV/SIF	1	Piece	S
54>	E3421-926125	WIRE ASSY P2.5 4P/4P L400MM AMP24V EMI MT8202	1	Piece	S
55>	E3461-064037	WIRE ASSY P2.5 10P/10P+4P/2.0 L400MM L680MM 12V 9V MT8202	1	Piece	S
56>	E3461-064038	WIRE ASSY P2.5 7P/7P L400MM 5V STANBY POWER MT8202 FOR 27"/32" LCD	1	Piece	S
57>	E3461-064039	WIRE ASSY 5P2.5 L560MM 5V 3.3V SIGNAL WIRE EMI MT8202	1	Piece	S
58>	E3461-064040	WIRE ASSY P2.0 14P/3P2.0/8P2.5 L400MM/L700MM INVERTER MT8202	1	Piece	S
59>	E3471-000044	WIRE WS SHIELD WIRE FOR 32LCD COMBO MICO KEY 13P/8P+5P	1	Piece	S
60>	E3471-000048	WIRE WS SHIELD WIRE FOR 32LCD TV+COMBO KEY WIRE FOR DVD	1	Piece	S

Item	Part Number	Part Description	Usage / unit	Unit	Key/Spare
61>	E3471-001002	WIRE WS SHIELD P1.0 0P L=220 FOR CPT LCD37"	1	Piece	S
62>	E3471-002005	WIRE WS SHIELD 6P2.0/+2P2.5+8P2.0 COMBO DVD SIGNAL WIRE MT8202	1	Piece	S
63>	E3471-002006	WIRE WS SHIELD WIRE 27LCD TV+COMBO DVD SIGNAL WIRE MT8202	1	Piece	S
64>	E4801-124001	SPEAKER 8 OHM 10W D3" YD78-1	2	Piece	S
65>	E4802-014001	TWEETER 6 OHM 10W D2" YD52-1	2	Piece	S
66>	E6203-32TD02	DISPLAY LCD 32" CPT WXGA CLAA320WA01C 1366X768 550CD/M2	1	Piece	S
67>	E7301-010002	BATTERY AAA R03P1.5V <2>	2	Piece	S
68>	E7801-D01001	DVD PCB ASSY MICO FOR MT8202	1	SET	S
69>	E7801-P02002	PCB ASSY PSU BOARD MEGMEET MT169 FOR 32LCD AC110-240V OUTPUT 12V/8V/24V 220W	1	SET	S
70>	734-L32AD03-01	PLASTIC BASE ASSY LCT3201TD W/O LOGO W/O PACKING SILVER	1	SET	S
71>	771BL27AD01-01	IR RECEIVE PCB ASSY FOR LCT27AD ATSC & DVD S-MT8202G	1	SET	S
72>	771KL27AD01-01	KEY PCB ASSY FOR TV S-MT8202G ATSC & DVD	1	SET	S
73>	771KL27AD02-01	KEY PCB ASSY FOR DVD LCT27AD ATSC & DVD S-MT8202G	1	SET	S

If you forget your V-Chip Password

- Omnipotence V-Chip Password: 8202.

Using the “Change Password” item

1. When enter the “V-Chip” menu, select “Change Password”.
2. Press ▲ or ▼ button to highlight the “Change Password” item.
3. Press **Enter** button to confirm and pop up a menu.

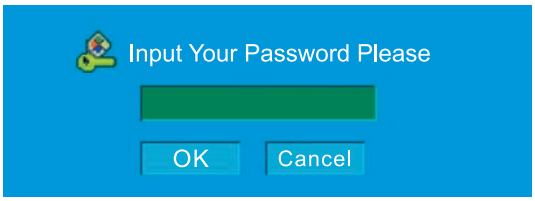

4. Use 0~9 buttons input the omnipotence password(8202), then Press **Enter** button to enter and pop up a menu.

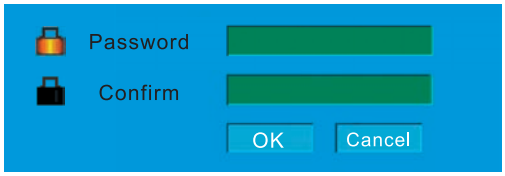

5. Use 0~9 buttons input your new password.
6. Press ▼ button to move to confirm blank.
7. Use 0~9 buttons input your new password again.
8. Press **Enter** button to confirm

-Suggest: Change to your familiar Password again.

Software Upgrade

Process of update MT8202

Preparing :

1. Connect **RS232-VGA download line**, One connector is connected to **VGA connect port of Plasma TV** ,while another side is connected to PC COM port.
2. Store the MtkTool into the PC .

Downloading :

3. Turn on AC power switch of the Plasma TV and then press the button “standby” of the remote control . The image could be found on the screen of the Plasma TV while the color of the power indicator is green . (the mode of the Plasma TV will be standby mode if after turn on the main power switch only .)
4. Execute MTKtool and select the chipset as MT8202. (the software of MTKtool will be sent to your side)

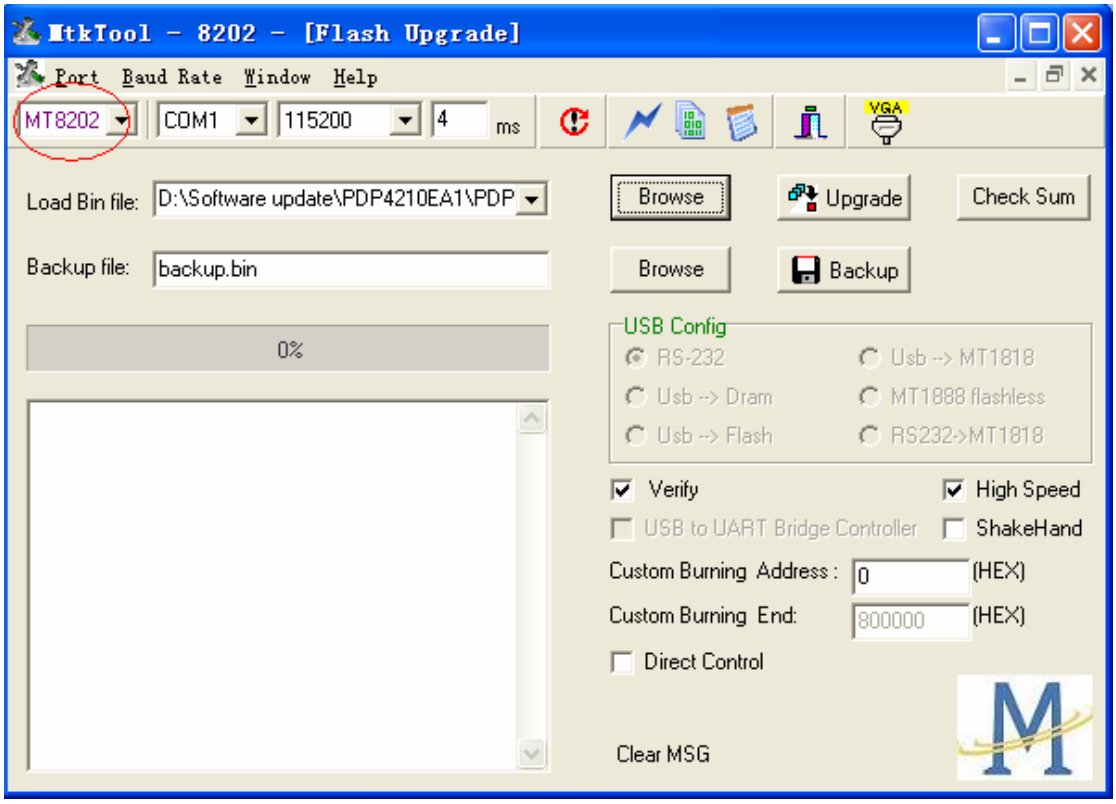

5. Select current COM port. (please try to check the COM port of your PC).

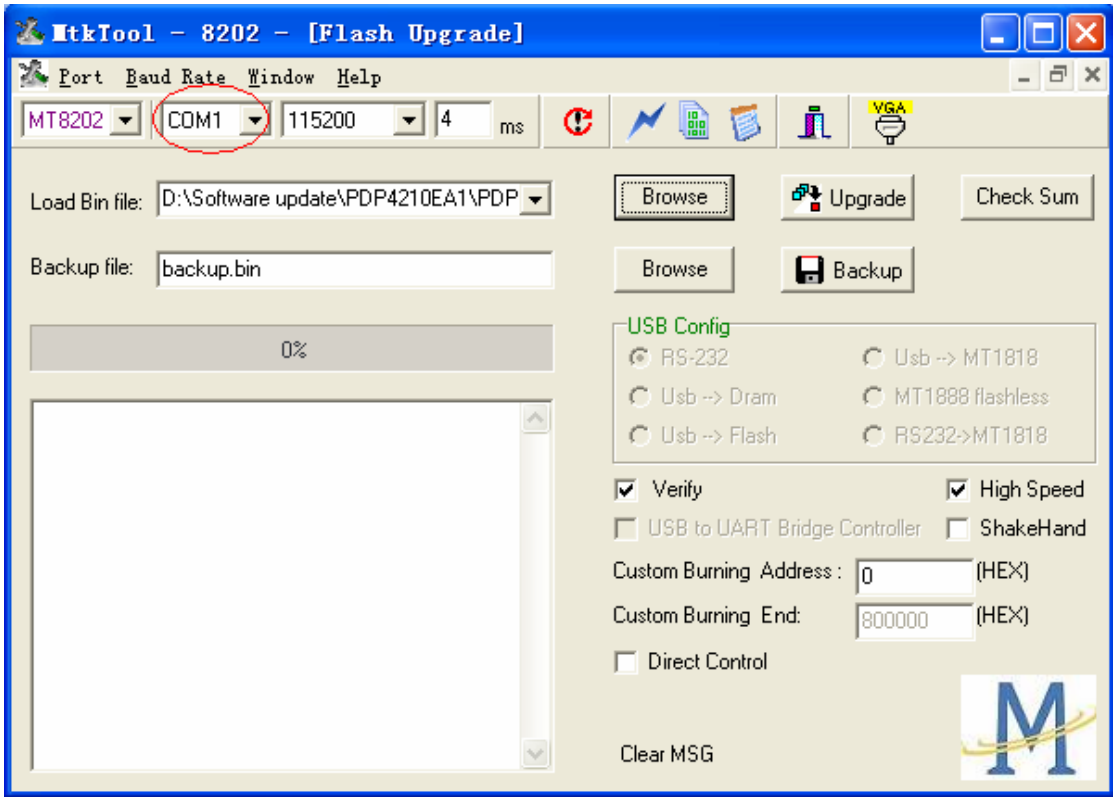

6. Choose the bit rate as 115200.

7. Select the update binary by pressing browse button. For exemple,the binary file name is PDP4210EA1_V09.bin. (this update firmware will be sent to your side)

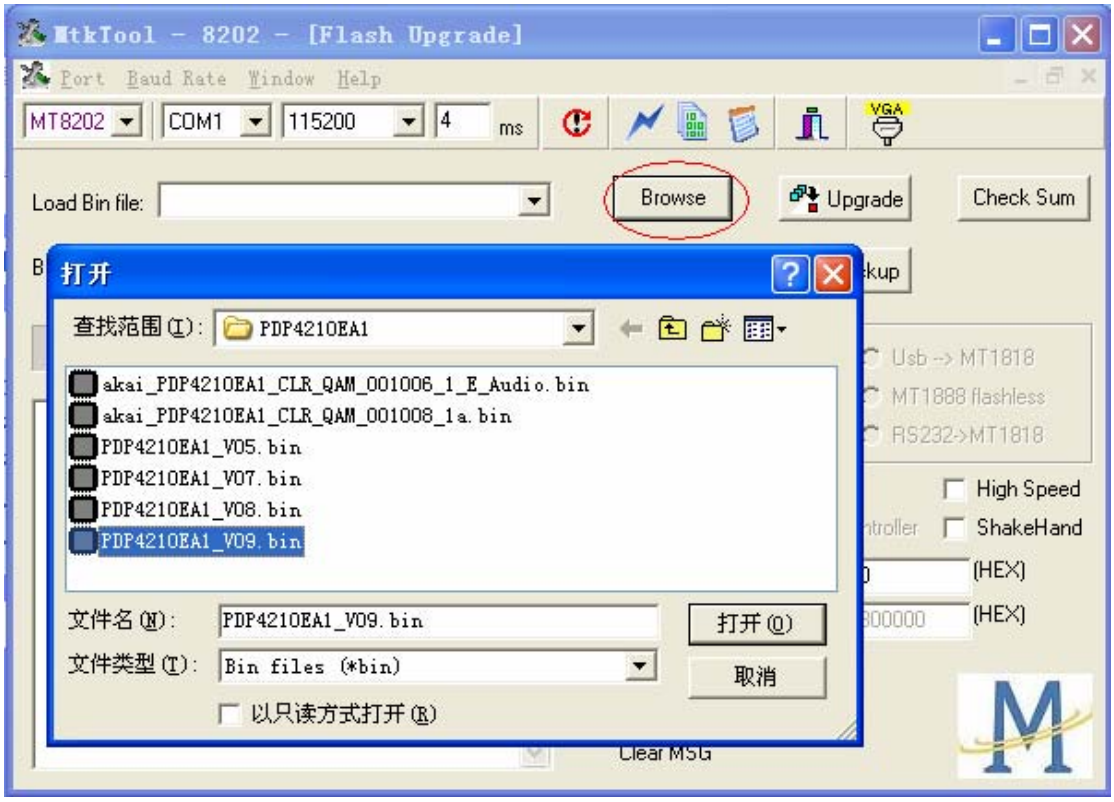

8. Press Upgrade button and start update process.

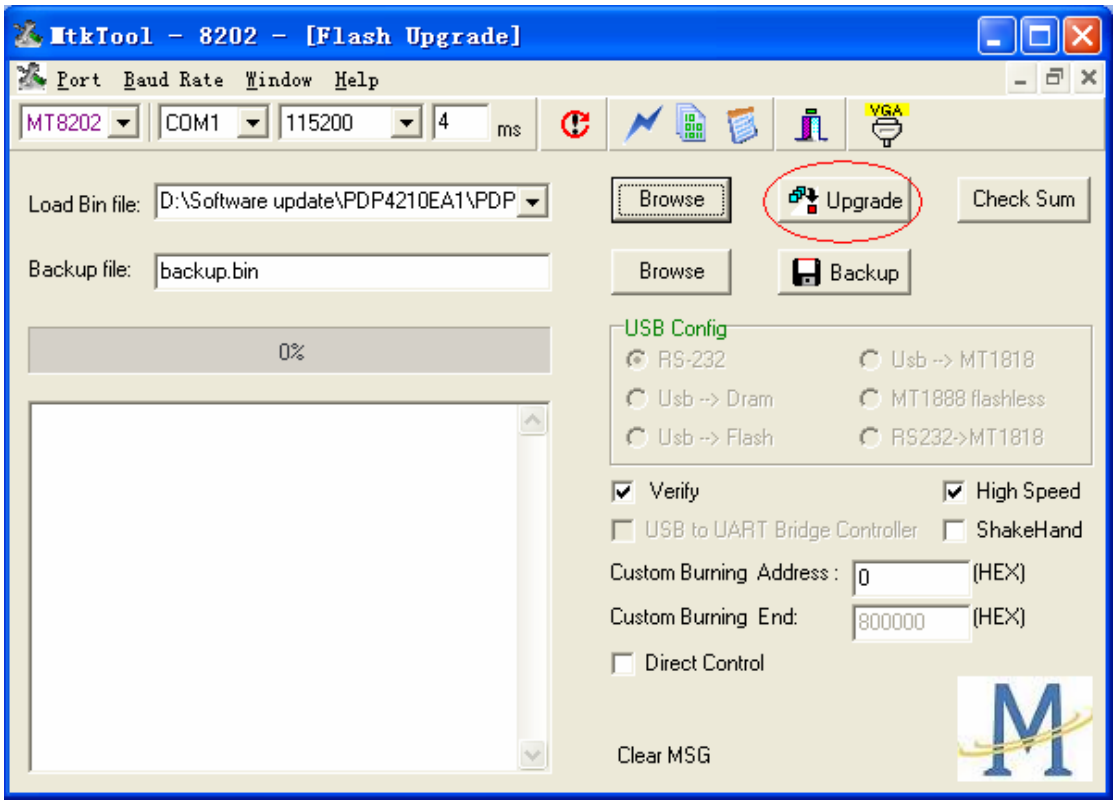

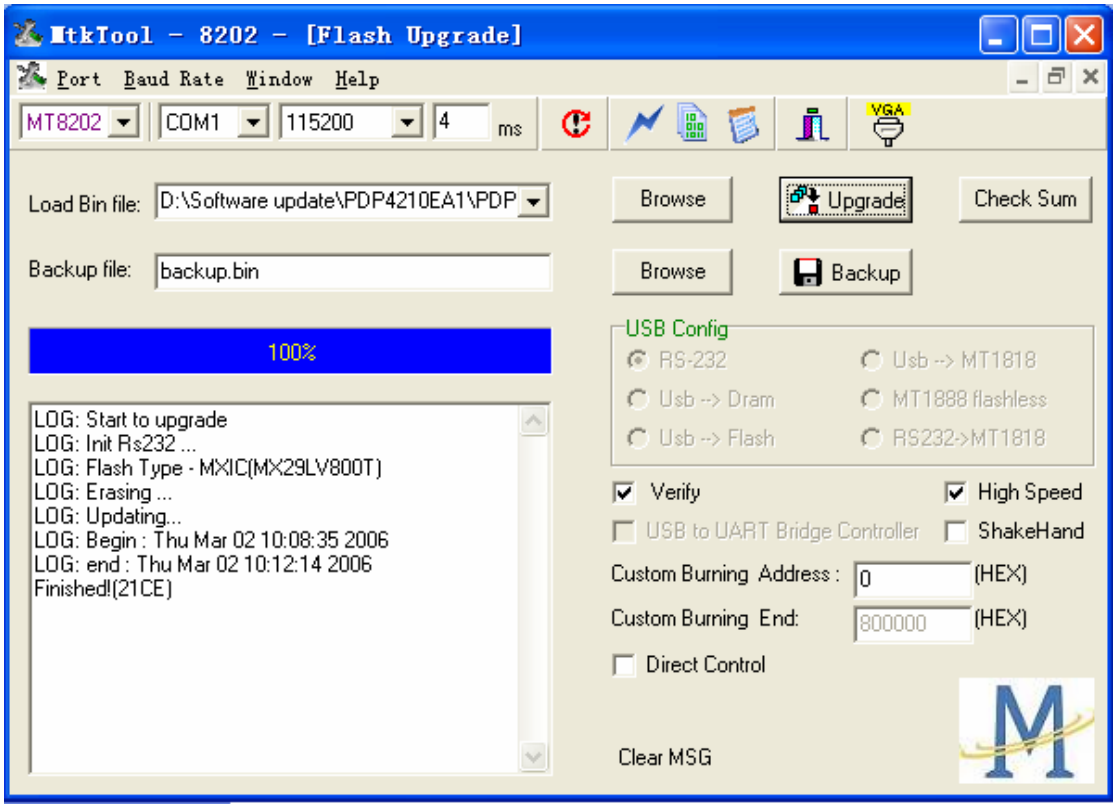

9. The update process is successful as the progress bar is 100%. After the update process is ok,

turn off power and wait indicator light is off. Turn on power and TV can work.

Checking

It is needed to check the version of the firmware for MT8202 which has been download into the Plasma TV .

Press Menu button of the remote control，following input “8202”of the remote control and OSD menu for Factory Setting is appeared on the screen .

Use the remote control and select the mode of Firmware Version and then enter the mode of Firmware Version . It is easy to be found the version of the current firmware for MT8202 is as the following : “Factory ID : PDP4210EA1_VXX ”

Process of update MT5351AG

Preparing :

1. Connect **RS232 download line**, One connector is connected to **RS232 connect port of Plasma TV** ， while another side is connected to PC COM port.
2. Store the MtkTool into the PC

Downloading :

3. Turn on AC power switch of the Plasma TV and then press the button “standby” of the remote control . The image could be found on the screen of the Plasma TV while the color of the power indicator is green . (the mode of the Plasma TV will be standby mode if after turn on the main power switch only .)
4. Execute MTKtool and select the chipset as MT5351AG. (the software of MTKtool will be sent to your side)

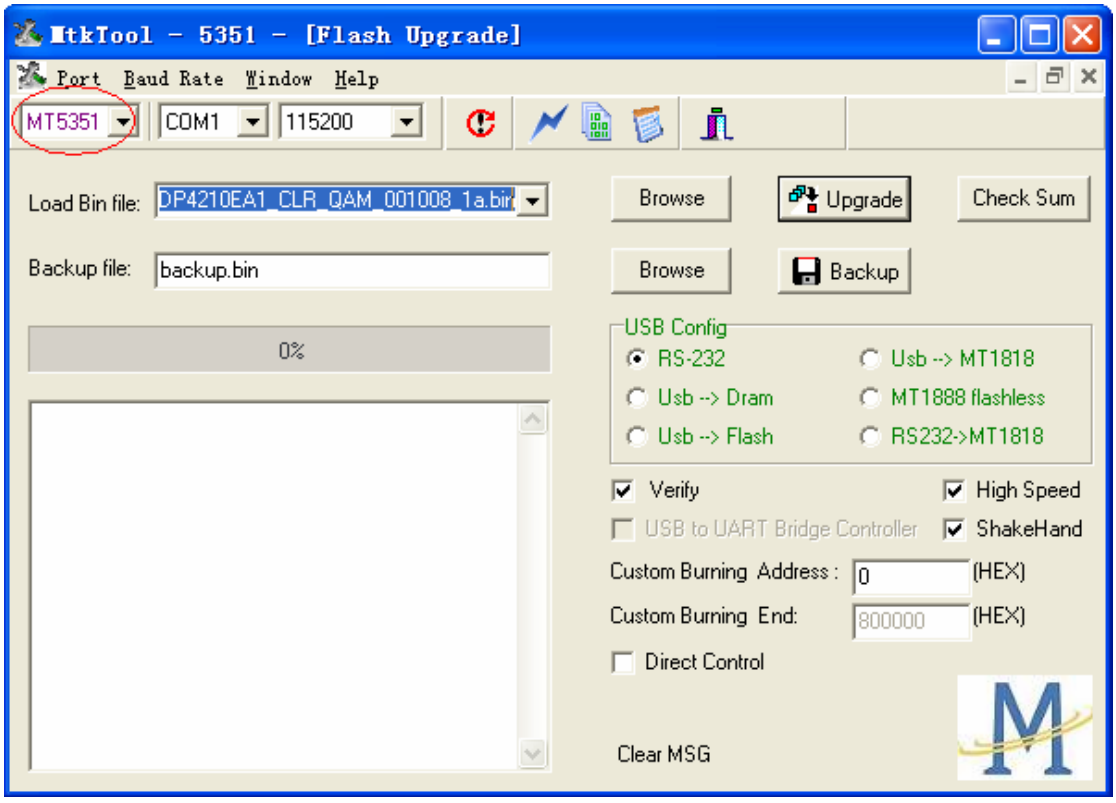

5. Select current COM port. (please try to check the COM port of your PC).

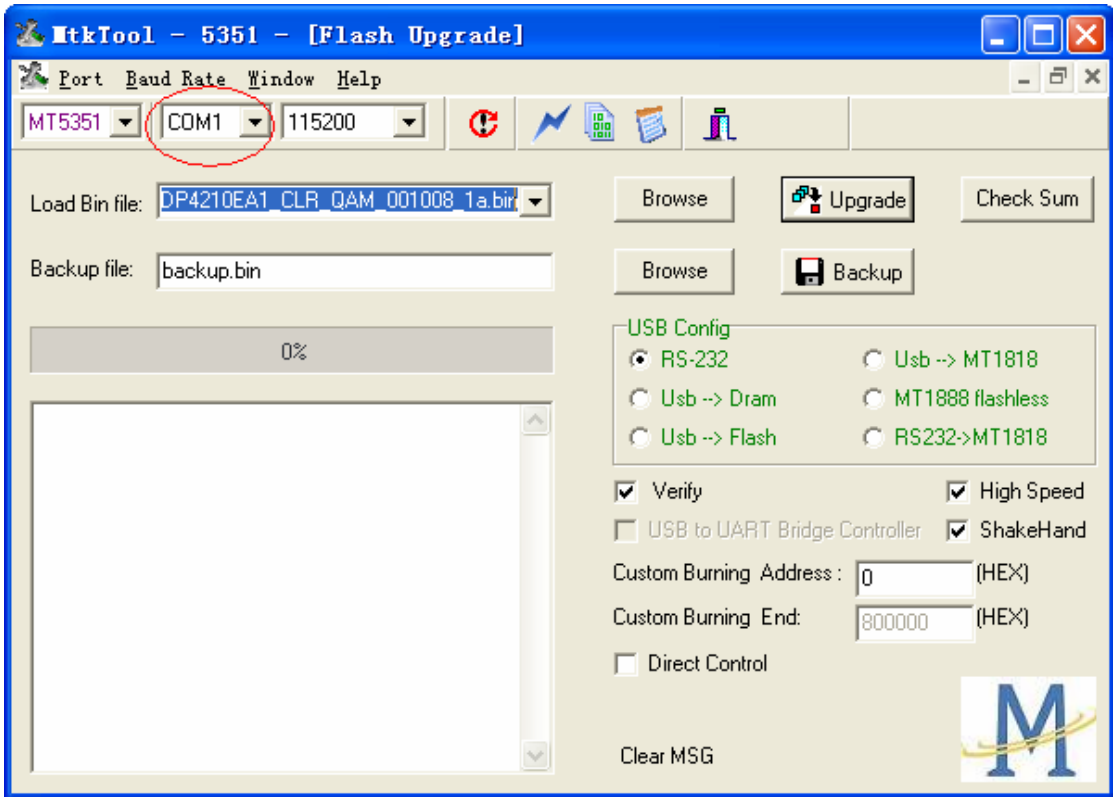

6. Choose the bit rate as 115200.

7. Select the update binary by pressing browse button. For exemple,the binary file name is

XXXX_PDP4210EA1_000000XX_X_P.bin. (this update firmware will be sent to your side)

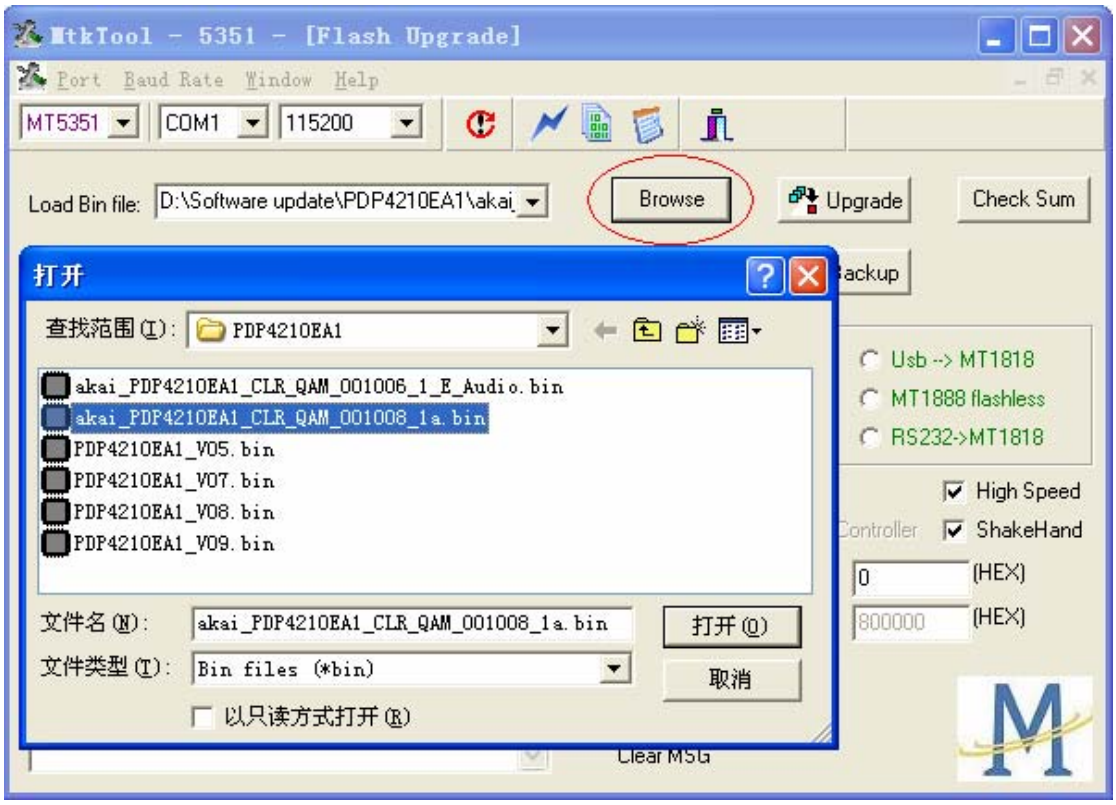

8. Press Upgrade button and start update process.

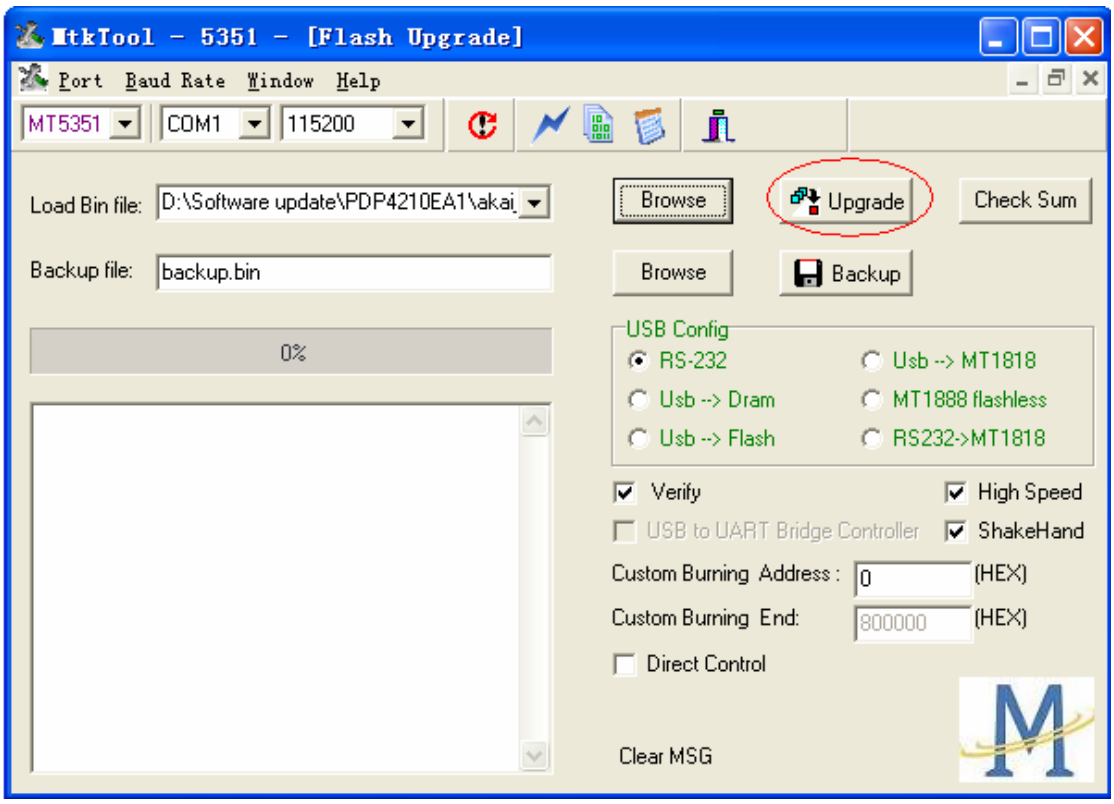

9. The update process is successful as the progress bar is 100%. After the update process is ok, turn off power and wait indicator light is off. Turn on power and TV can work.

Checking :

It is needed to check the version of the firmware for MT5351AG which has been download into the Plasma TV .

Press Menu button of the remote control and the main OSD menu is appeared on the screen .

Use the remote control and select the DTV menu . following input “0000” (zero , zero , zero , zero) of the remote control .Then enter the mode of factory after input the digits .
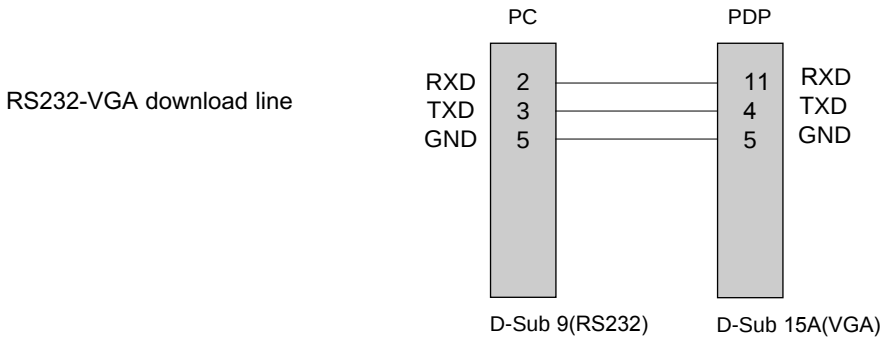
It is easy to be found the version of the current firmware for MT5351AG is “PDP4210EA1 CLA_QAM_XXXXXX_XX”under the mode of factory .